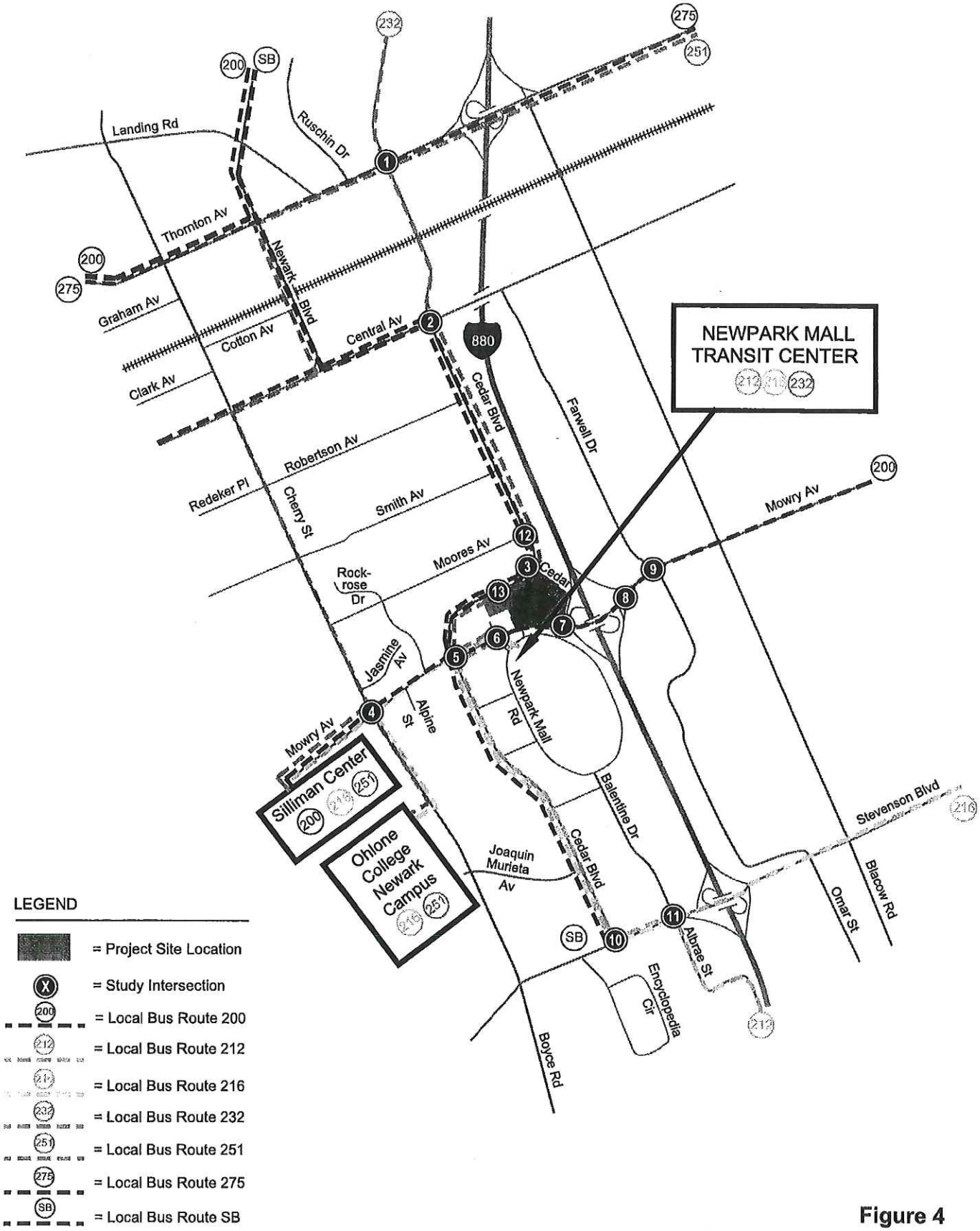

Figure 4
Existing Transit Service

NORTH
Not to Scale

Existing Intersection Levels of Service

Existing AM and PM peak hour traffic volumes were obtained from traffic counts conducted between January and May 2014. The traffic count data are included in Appendix A. The operations of the study intersections were evaluated using TRAFFIX software to determine their levels of service (LOS). The lane configurations used for the calculations are shown on Figure 5. The intersection turning movement volumes are shown on Figure 6.

Table 4 presents the results of the intersection level of service calculations. Three of the intersections currently operate at LOS D and therefore below the LOS C standard in the City of Newark. These intersections are: Cedar Boulevard and Thornton Avenue, Cherry Street and Mowry Avenue, and Cedar Boulevard and Mowry Avenue. All of the other study intersections operate at acceptable levels of service. The TRAFFIX level of service calculation sheets are included in Appendix B.

Existing Freeway Ramp Volume-to-Capacity Ratios

Table 5 presents the results of the freeway ramp operations analysis. The table shows that the eastbound Mowry Avenue on-ramps to southbound and northbound I-880 currently operate at a V/C lower than 1.0.

Observed Existing Traffic Conditions

Traffic conditions in the field were observed in order to identify any existing operational deficiencies and to confirm the accuracy of calculated levels of service. The purpose of this effort was (1) to identify any existing traffic problems that may not be directly related to intersection level of service, and (2) to identify any locations where the level of service calculations do not accurately reflect level of service in the field. Based on the field observations, the level of service analysis appears to generally reflect actual existing traffic conditions. The observations in the field showed some noteworthy traffic conditions during the peak periods, as described below.

Mowry Avenue Westbound to I-880 Southbound Loop On-Ramp. The ramp is metered in the AM peak hour. During much of the AM peak hour, vehicle queues extended from the metering light back onto westbound Mowry Avenue across the overcrossing and back to the intersection at the I-880 northbound off-ramp. Note that the project contributes no trips to this movement.

Cedar Boulevard and Thornton Avenue. During the PM peak hour, the southbound left-turn queues extended out of the left-turn pockets and back a total of about 400 feet from the stop bar. Not all vehicles in the queue cleared the intersection in a single cycle. These queues sometimes blocked left-turn access into the shopping center on the northeast quadrant of the intersection. The long southbound left-turn queues did not significantly affect the southbound through movements as the through movement volume is not particularly high and the throughs were able to pass in the adjacent through lane. Note that the project contributes no trips to this movement. Also, in the PM peak hour, the westbound left-turn queues regularly extended out of the left-turn pocket and into the adjacent through lane. Because of the long left-turn phase, vehicles in the queue generally cleared the intersection in a single cycle.

Alpenrose Court and Mowry Avenue. In the PM peak hour, vehicles in the right-most eastbound through lane sometimes extended from Alpenrose Court to Cedar Boulevard. This did not appreciably affect operations at this intersection or the upstream intersection at Cedar Boulevard and Mowry Avenue.

Mowry Avenue Residential

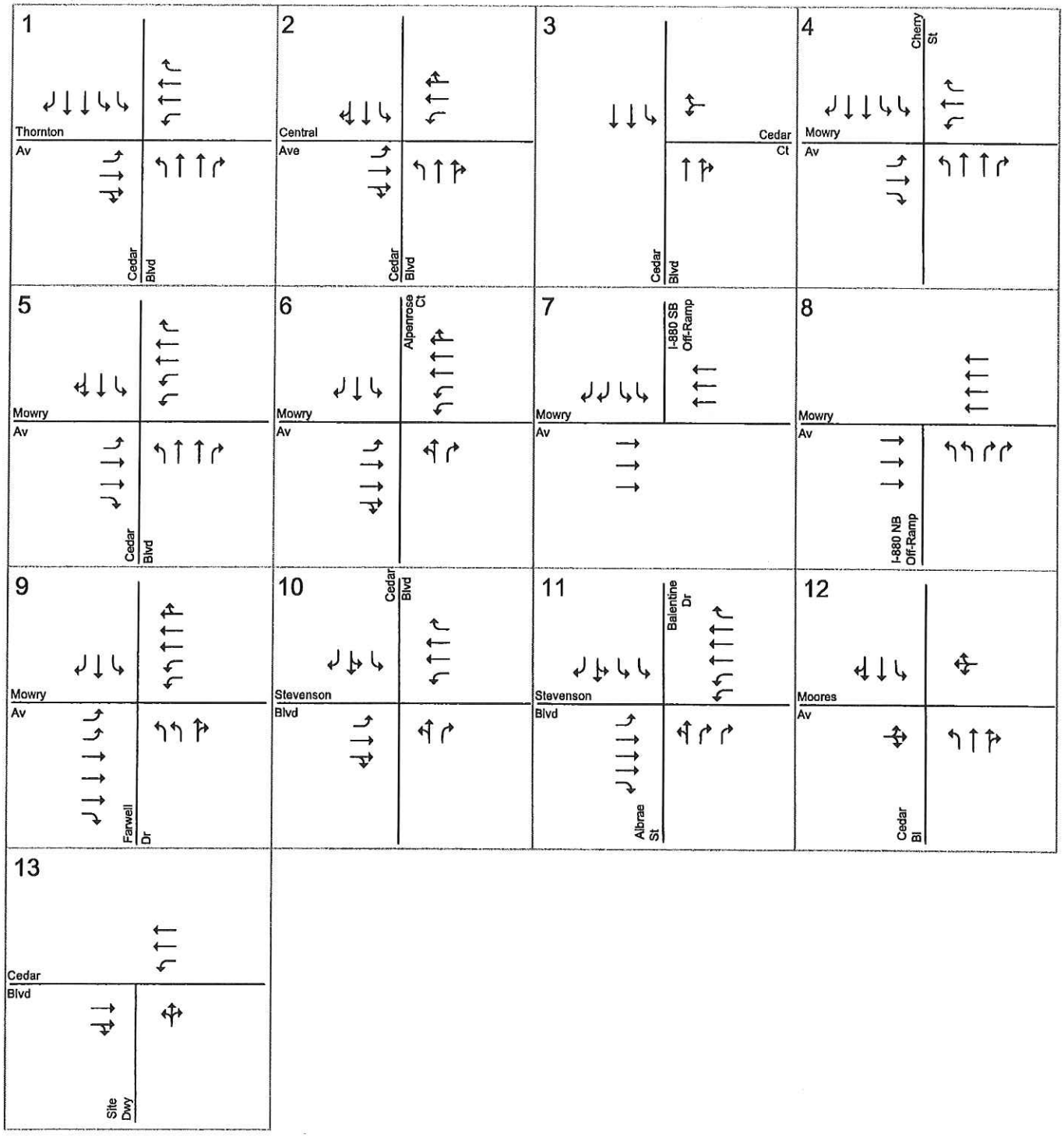

Figure 5
Existing Lane Configurations

HEXAGON

Mowry Avenue Residential

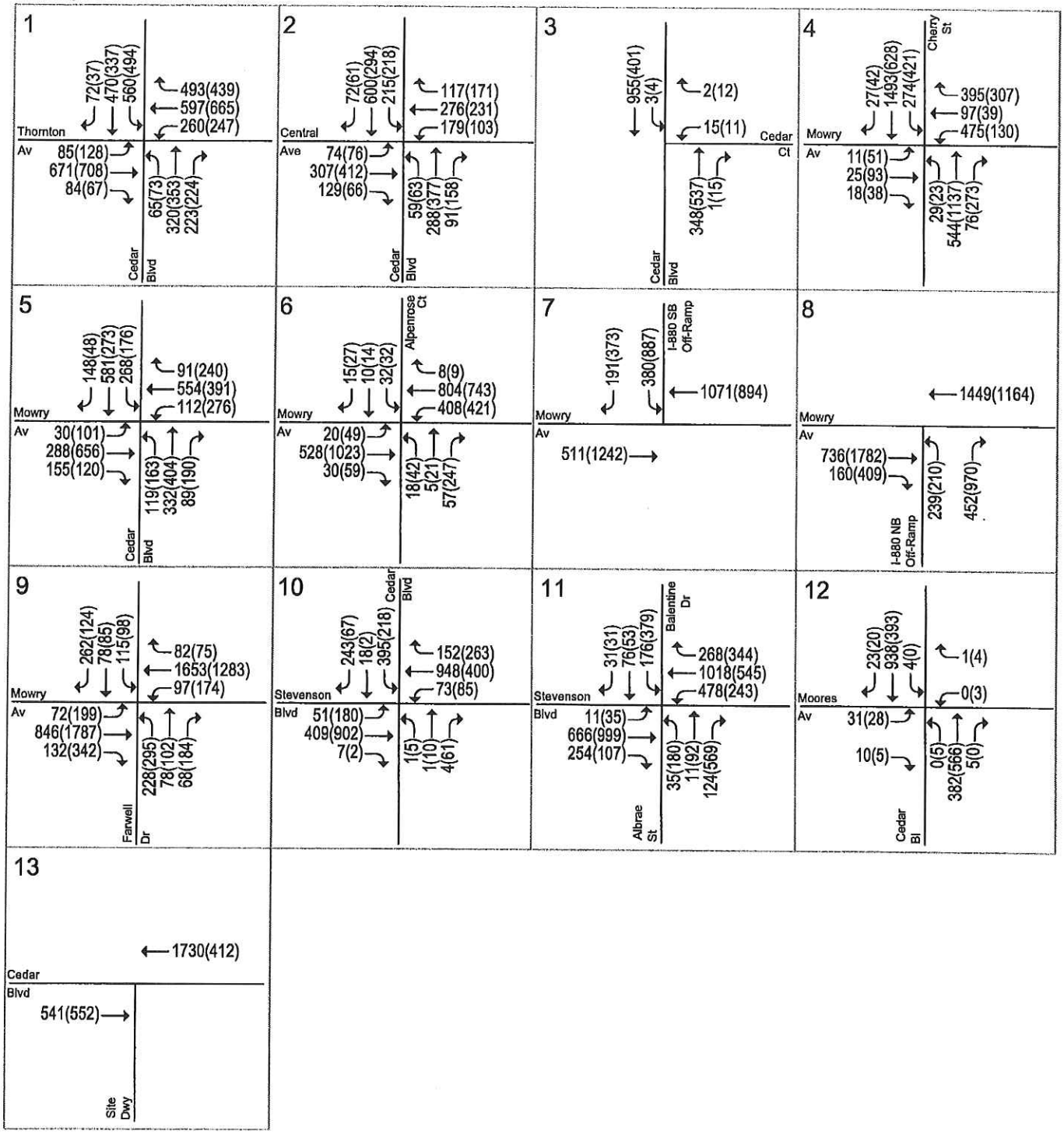

LEGEND

XX(XX) =AM(PM) Peak-Hour Traffic Volumes

Figure 6
Existing Traffic Volumes

HEXAGON

Table 4
Existing Intersection Levels of Service

Intersection	Peak Hour	Count Date	Existing Avg. Delay [1]	Existing LOS
Signalized Intersections:				
Cedar Blvd and Thornton Ave	AM	01/28/14	35.9	D
	PM	01/28/14	43.8	D
Cedar Blvd and Central Ave	AM	05/14/14	24.5	C
	PM	05/14/14	21.1	C
Cherry St and Mowry Ave	AM	01/28/14	36.6	D
	PM	01/28/14	23.7	C
Cedar Blvd and Mowry Ave	AM	05/14/14	29.6	C
	PM	05/14/14	38.4	D
Alpenrose Ct and Mowry Ave	AM	05/14/14	18.8	B
	PM	05/14/14	23.2	C
I-880 SB Ramps and Mowry Ave	AM	05/13/14	8.6	A
	PM	05/13/14	11.7	B
I-880 NB Ramps and Mowry Ave	AM	05/13/14	9.2	A
	PM	05/13/14	12.6	B
Farwell Dr and Mowry Ave	AM	04/02/14	24.9	C
	PM	04/02/14	28.0	C
Cedar Blvd and Stevenson Blvd	AM	05/14/14	20.1	C
	PM	05/14/14	18.5	B
Albrae St/Balentine Dr and Stevenson Blvd	AM	05/14/14	20.2	C
	PM	05/14/14	26.8	C
Cedar Blvd and Moores Ave	AM	05/13/14	12.8	B
	PM	05/13/14	12.3	B
Unsignalized Intersections:				
Cedar Blvd and Cedar Ct[2]	AM	04/02/14	0.2/16.3	A/C
	PM	04/02/14	0.3/12.9	A/B

[1] Signalized intersection levels of service and delays reported are for overall average delay. Unsignalized intersection delays and LOS reported are for both overall average delay / average delay on the worst approach.

[2] Side street stop controlled Intersection.

Table 5
Existing Freeway Ramp V/C Ratios

Freeway Ramp	Peak Hour	Capacity (vphpl)[1]	Volume	V/C Ratio[2]
EB Mowry Ave to SB I-880	AM	450	358	0.80
	PM	900	286	0.32
EB Mowry Ave to NB I-880	AM	900	160	0.18
	PM	510	409	0.80

[1] Ramp Capacity obtained from the Alameda County Transportation Model Update, August 9, 2011. HOV Lanes ignored for this calculation.

[2] V/C ratio = Volume-to-capacity ratio

3. Background Conditions

This chapter describes background traffic conditions. Traffic volumes for background conditions comprise volumes from existing traffic counts plus traffic generated by other approved developments in the vicinity of the site. Traffic volume and roadway network assumptions are described below.

Roadway Network Assumptions and Traffic Volumes

There are no near term traffic improvements planned in the study area that are likely to be completed before the proposed project is occupied. Therefore, it was assumed for this analysis that all intersection geometries would remain the same as under existing conditions. Background peak-hour traffic volumes were calculated by adding to existing volumes the estimated traffic from approved but not yet constructed developments. The development projects are shown on Table 6. Background traffic volumes are shown on Figure 7.

Background Intersection Levels of Service

Intersection level of service calculations were conducted to evaluate the operating levels of the key intersections under background conditions. Table 7 presents the results of the intersection level of service calculations under background conditions. Two of the intersections would continue to operate at LOS D, which is below the LOS C standard in the City of Newark. These intersections are: Cedar Boulevard and Thornton Avenue, and Cedar Boulevard and Mowry Avenue. The intersection of Cherry Street and Mowry Avenue would degrade from LOS D under existing conditons to LOS E under background conditions in the AM peak hour. All of the other study intersections would operate at acceptable levels of service. The TRAFFIX level of service calculation sheets are included in Appendix B.

Background Freeway Ramp Volume-to-Capacity Ratios

Table 8 presents the results of the freeway ramp operations analysis. The table shows that the eastbound Mowry Avenue on-ramps to southbound and northbound I-880 would operate at a V/C lower than 1.0. under background conditions.

Table 6
Approved Developments

Project	Location	Description
Fremont:		
Thermofisher Manufacturing	NE quadrant of I-880/Mission Blvd	53,250 s.f. of office/R&D 52,500 s.f. of warehouse 169,250 s.f. of manufacturing
Chic-fil-A	5593 Auto Mall Pkwy	4,526 s.f. restaurant
The Block	SE of Pacific Commons b/t Curie/Auto Mall	139,516 s.f. discount superstore 16 screen movie theater 112,950 s.f. retail/restaurant 4,200 s.f. fast food restaurant
Carmax	SW quadrant of Christy St/Bunche Dr	51,503 s.f. of car sales/service facility
Delta Products	SW quadrant of Fremont Blvd/Cushing Pkwy	178,327 s.f. of R&D
The Globe	6000 Stevenson Blvd	390,283 s.f. retail 15,000 s.f. of theatre use 250 room hotel 590 space parking garage
Patterson Ranch	North of Paseo Padre Pkwy at Ardenwood Blvd	500 single family units 10 acres of religious facilities
Newark:		
Mowry Center	NW quadrant of Mowry and I-880	80,000 s.f. retail (existing unoccupied bldg.)
Areas 3 & 4	Stevenson Boulevard west of Cherry St.	1,260 residential units 600 student school 18-hole golf course
Timber/Cedar Residential	Cedar Blvd south of Central Ave	84 single family units 80 townhome/condo units
Cherry Logistics	Cherry St north of Mowry Ave	Net increase of 344,600 s.f. industrial space
Cedar Townhomes	NE quadrant of Cedard and Mowry School Rd	85 townhome/condo units
Dumbarton TOD (Partial)	South of the Southern Railroad tracks, west of Willow Street, and east of Newark Salt Flats	Tract 8085: 431 single family units and 116 condo units Tract 8098: 217 single family units Tract 8110: 27 singl family units Tract 8157: 85 condo units and 75 senior apartments 15,000 s.f. of supermarket

Table 7
Background Intersection Levels of Service

Intersection	Peak Hour	Existing Avg. Delay [1]	Existing LOS	Background Avg. Delay [1]	Background LOS
Signalized Intersections:					
Cedar Blvd and Thornton Ave	AM	35.9	D	36.9	D
	PM	43.8	D	44.2	D
Cedar Blvd and Central Ave	AM	24.5	C	25.1	C
	PM	21.1	C	21.9	C
Cherry St and Mowry Ave	AM	36.6	D	56.0	E
	PM	23.7	C	31.2	C
Cedar Blvd and Mowry Ave	AM	29.6	C	30.3	C
	PM	38.4	D	38.3	D
Alpenrose Ct and Mowry Ave	AM	18.8	B	19.0	B
	PM	23.2	C	26.9	C
I-880 SB Ramps and Mowry Ave	AM	8.6	A	8.7	A
	PM	11.7	B	11.6	B
I-880 NB Ramps and Mowry Ave	AM	9.2	A	9.4	A
	PM	12.6	B	12.7	B
Farwell Dr and Mowry Ave	AM	24.9	C	24.7	C
	PM	28.0	C	27.8	C
Cedar Blvd and Stevenson Blvd	AM	20.1	C	22.8	C
	PM	18.5	B	30.3	C
Albrae St/Balentine Dr and Stevenson Blvd	AM	20.2	C	21.4	C
	PM	26.8	C	26.3	C
Cedar Blvd and Moores Ave	AM	12.8	B	13.1	B
	PM	12.3	B	17.0	B
Unsignalized Intersections:					
Cedar Blvd and Cedar Ct[2]	AM	0.2/16.3	A/C	0.2/17.6	A/C
	PM	0.3/12.9	A/B	0.3/13.8	A/B

[1] Signalized intersection levels of service and delays reported are for overall average delay. Unsignalized intersection delays and LOS reported are for both overall average delay / average delay on the worst approach.

[2] Side street stop controlled Intersection.

Mowry Avenue Residential

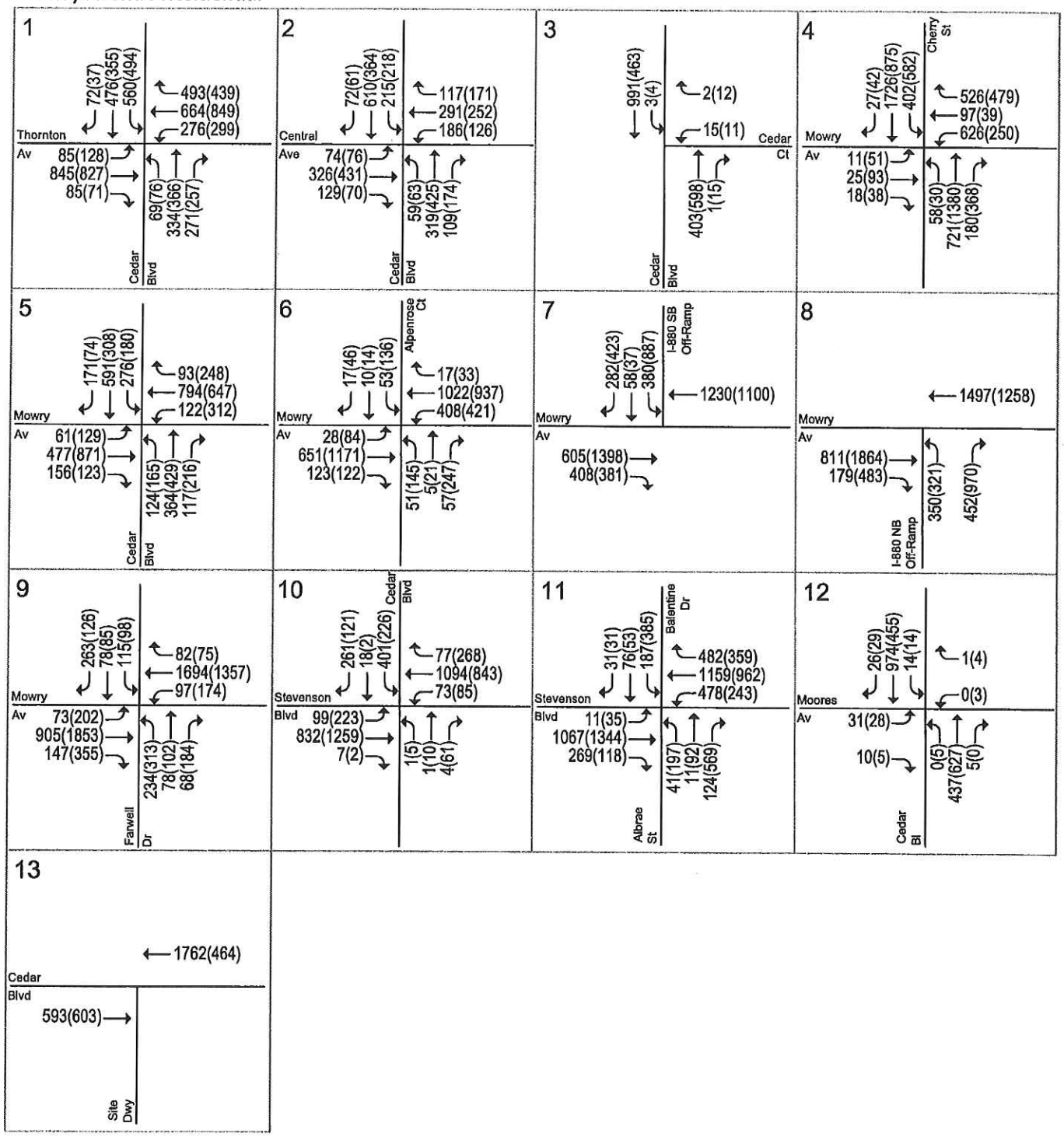

LEGEND

XX(XX) =AM(PM) Peak-Hour Traffic Volumes

Figure 7
Background Traffic Volumes

HEXAGON

Table 8
Background Freeway Ramp V/C Ratios

Freeway Ramp	Peak Hour	Capacity (vphpl)[1]	Volume	V/C Ratio[2]
EB Mowry Ave to SB I-880	AM	450	408	0.91
	PM	900	381	0.42
EB Mowry Ave to NB I-880	AM	900	179	0.20
	PM	510	483	0.95

[1] Ramp Capacity obtained from the Alameda County Transportation Model Update, August 9, 2011. HOV Lanes ignored for this calculation.
[2] V/C ratio = Volume-to-capacity ratio

4. Project Impacts and Recommendations

The near term impacts of the proposed project are discussed in this chapter. First, the method used to estimate the amount of traffic added to the roadway system by the project is described. Then, individual intersections are analyzed with the addition of project traffic. Under project conditions, the roadway network would be the same as under background conditions.

Project Traffic Estimates

The amount of traffic associated with a development is estimated using a three-step process: (1) trip generation, (2) trip distribution, and (3) trip assignment. In the first step, the amount of traffic entering and exiting the site is estimated for the AM and PM peak hours. In the second step, the directions of approach and departure of project traffic are estimated. In the third step, the trips are assigned to specific streets and intersections. This process is described in the following sections.

Trip Generation

The magnitude of traffic added to the roadway system by a particular development is estimated by applying industry-standard trip generation rates to the type and size of the development. The standard trip generation rates are published in the Institute of Transportation Engineers (ITE) manual entitled *Trip Generation, 9th Edition*, 2012.

Based on ITE's trip generation rates for condominium/townhouse units (ITE category 230) and single-family homes (ITE category 210), the project would generate 139 gross trips during the AM peak hour and 170 gross trips during the PM peak hour. The project can receive credit for trips generated by the existing uses on the site. In the case of this site there is, in addition to the existing motel, entitlement for 200,000 s.f. of retail. The 200,000 s.f. currently consists of approximately 80,000 s.f. of unoccupied buildings and 120,000 s.f. of vacant land that had previously been built but has since been demolished.

For the near-term traffic analysis, the site is credited with the existing trips from the motel and the number of trips that would be generated by the 80,000 s.f. of unoccupied retail buildings were they to be occupied. This is a conservative estimate because, as previously stated, the project has entitlement for up to 200,000 square feet of retail uses. The credit for the existing trips generated by the motel were determined from driveway counts at the motel entrances and exits. The existing motel is currently generating trips commensurate with approximately 50-percent occupancy. The credit for the 80,000 s.f. of unoccupied retail buildings was estimated by applying ITE trip generation rates applicable to shopping centers (ITE code 820).

The project trip generation for the near-term scenario is shown in Table 9. Under near-term project conditions, the project would cause an increase in traffic in the AM peak hour in the outbound direction from the site, but would result in a decrease in traffic inbound in the AM peak-hour and in both directions in the PM peak hour.

Trip Distribution & Assignment

Project trips under the near-term scenario were assigned to the roadways as follows: (1) the gross project trips were assigned to the roadways using a trip distribution applicable to residential uses; (2) the existing motel trips were assigned to the roadways using the residential distribution, and (3) the 80,000-s.f. retail trips were assigned to the roadways using a trip distribution applicable to retail uses. The trip distributions for the retail and residential/model uses were developed using forecasts from the Alameda County Travel Demand Forecast (TDF) model. Each of these components was independently assigned to the study intersections. At each intersection, at the turning-movement level of detail, the motel trips and approved retail trips were subtracted from the gross project trips. The trip distributions for the residential/motel and the retail uses are shown on Figure 8. The resulting net trip assignment is shown on Figure 9. Note that many of the resulting net turning movement volumes are negative. That is, the project would, in those cases, result in a decrease in traffic relative to background traffic volumes. Because the project would produce increases in traffic at some locations, it was necessary to perform an intersection level of service analysis. The traffic volumes under background plus project conditions are shown on Figure 10.

Intersection Level of Service Under Project Conditions

The results of the intersection level of service analysis under background plus project conditions are summarized in Table 10. Three of the intersections would operate at an unacceptable LOS D or worse in at least one of the peak hours. The intersections are: Cedar Boulevard and Thornton Avenue, Cedar Boulevard and Mowry Avenue, and Cherry Street and Mowry Avenue. The latter would operate at LOS E in the AM peak hour. There would be no impact at these intersections because the addition of project trips would neither cause the level of service to degrade to an unacceptable level nor cause the average delay at any of the intersections to increase by four or more seconds. All of the other study intersections would operate at acceptable levels of service. The detailed TRAFFIX level of service calculation sheets are included in Appendix B.

Freeway Ramp V/C Ratios Under Project Conditions

Table 11 presents the results of the freeway ramp operations analysis under background plus project conditions. The table shows that the eastbound Mowry Avenue on-ramps to southbound and northbound I-880 would operate at a V/C lower than 1.0. under background plus project conditions. According to the significance criteria established for this analysis, there would be no impacts at the freeway ramps studied.

Table 9
Near-Term Project Trip Generation

Land Use	Size	Unit	Daily Rate	Daily Trips	AM Peak Hour Rate	AM Peak Hour In	AM Peak Hour Out	AM Peak Hour Total	PM Peak Hour Rate	PM Peak Hour In	PM Peak Hour Out	PM Peak Hour Total
Project												
Condominium/Townhome	228	d.u.	5.81	1,325	0.44	17	83	100	0.52	79	39	119
Single-Family Detached	51	d.u.	9.52	486	0.75	10	29	38	1.00	32	19	51
Total Gross Project Trips						27	112	139		112	58	170
Existing Uses												
Shopping Center[3]	80	ksf	42.70	3,416	0.96	48	29	77	3.71	142	154	297
Pass-by[1]										-36	-39	-74
Primary						48	29	77		107	116	223
Motel	217	rooms				12	30	42		27	22	49
Total Gross Existing Site Trips[2]						60	59	119		134	138	272
TOTAL NET PROJECT TRIPS						**-33**	**53**	**20**		**-22**	**-80**	**-103**

[1] Pass-by rate of 25% assumed for shopping center in PM peak hour.
[2] Gross existing site trips = motel trips plus shopping center primary trips; pass-by trips are excluded.
[3] Square footage based on current actual buildings on the ground.

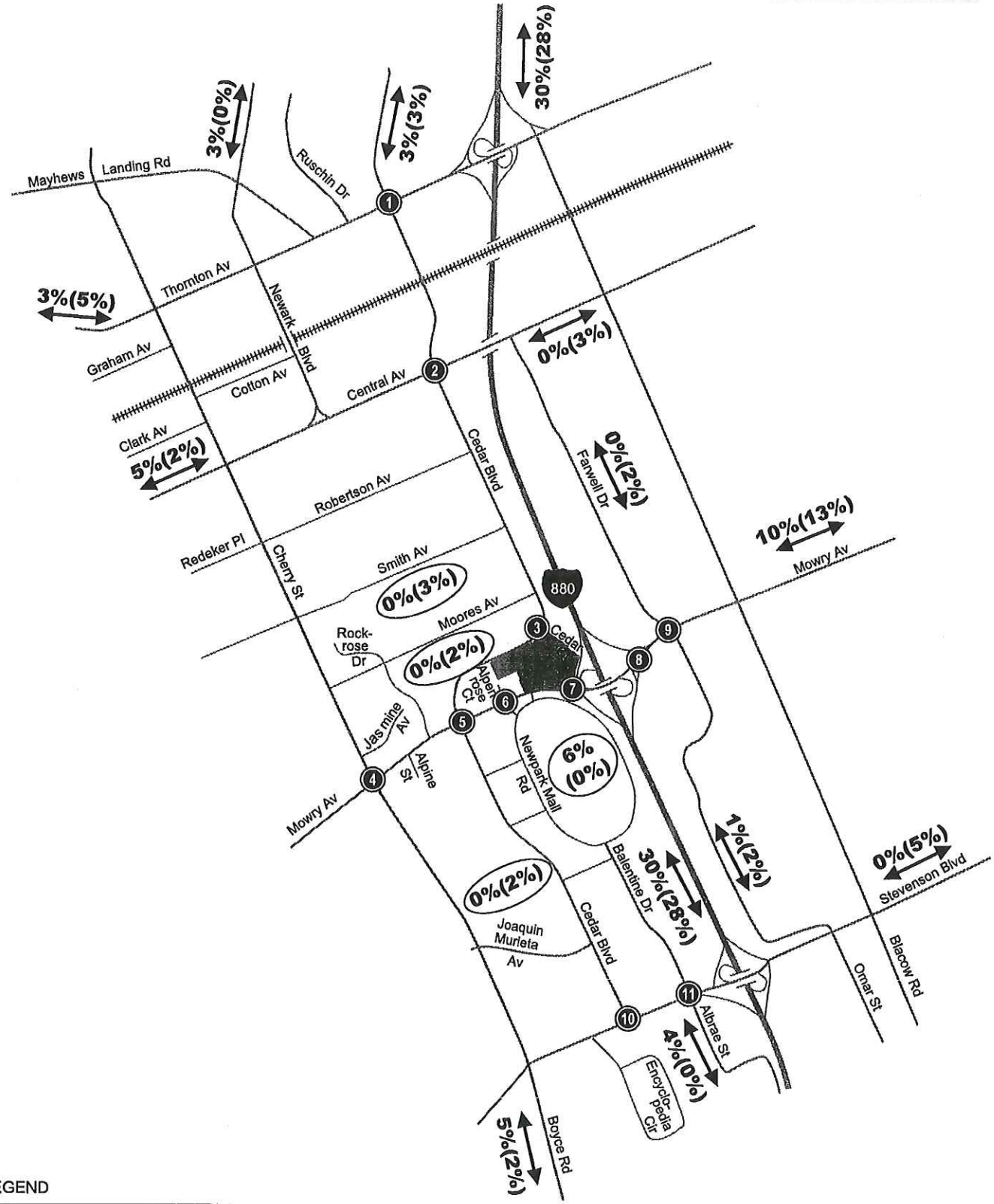

LEGEND

= Project Site Location

= Study Intersection

XX%(XX%) = Residential(Existing Retail) Trip Distribution

Figure 8
Project and Existing Retail Trip Distributions

HEXAGON

NORTH
Not to Scale

Mowry Avenue Residential

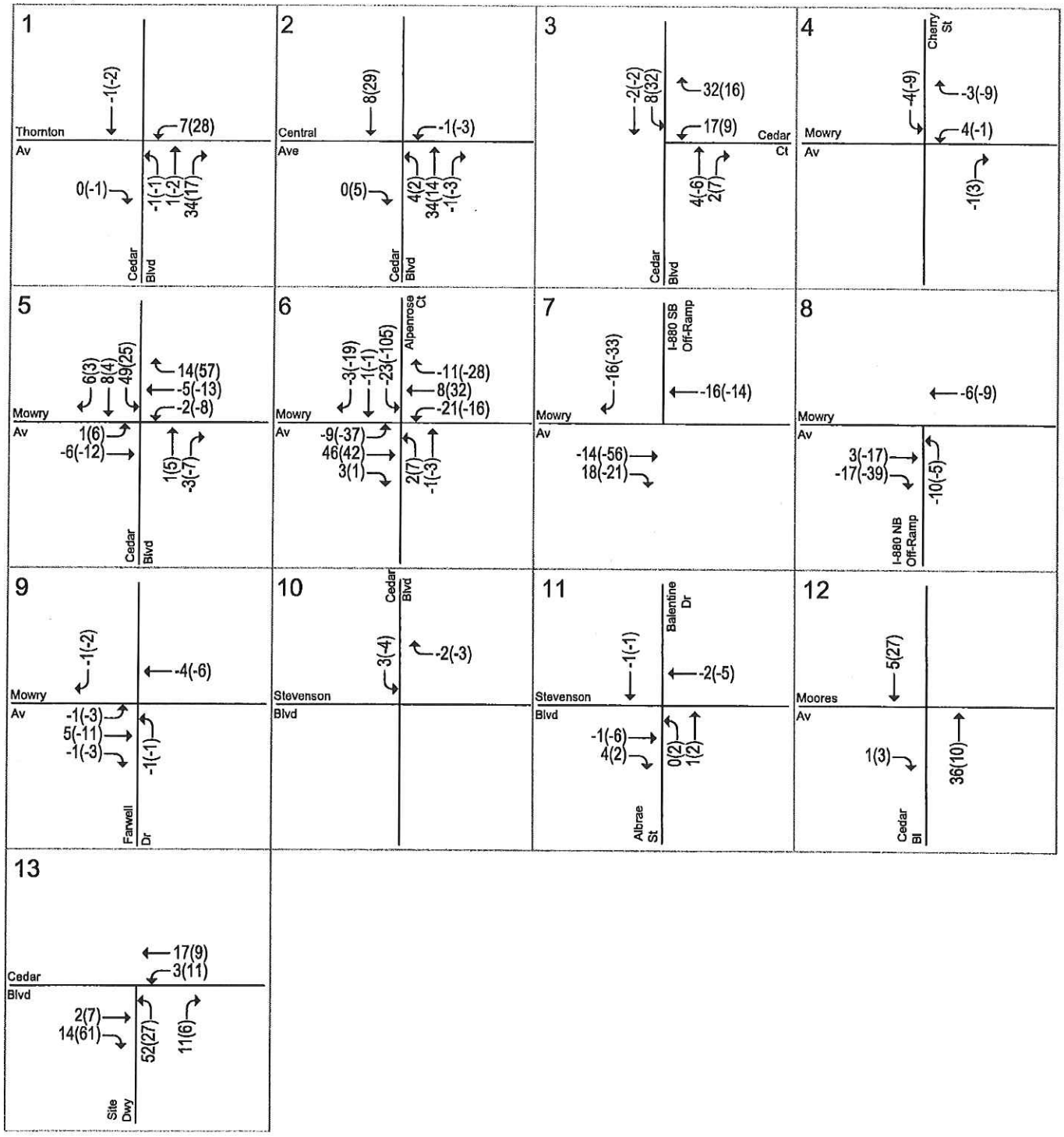

LEGEND

XX(XX) =AM(PM) Peak-Hour Trips

Figure 9
Near-Term Project Trip Assignment

HEXAGON

Mowry Avenue Residential

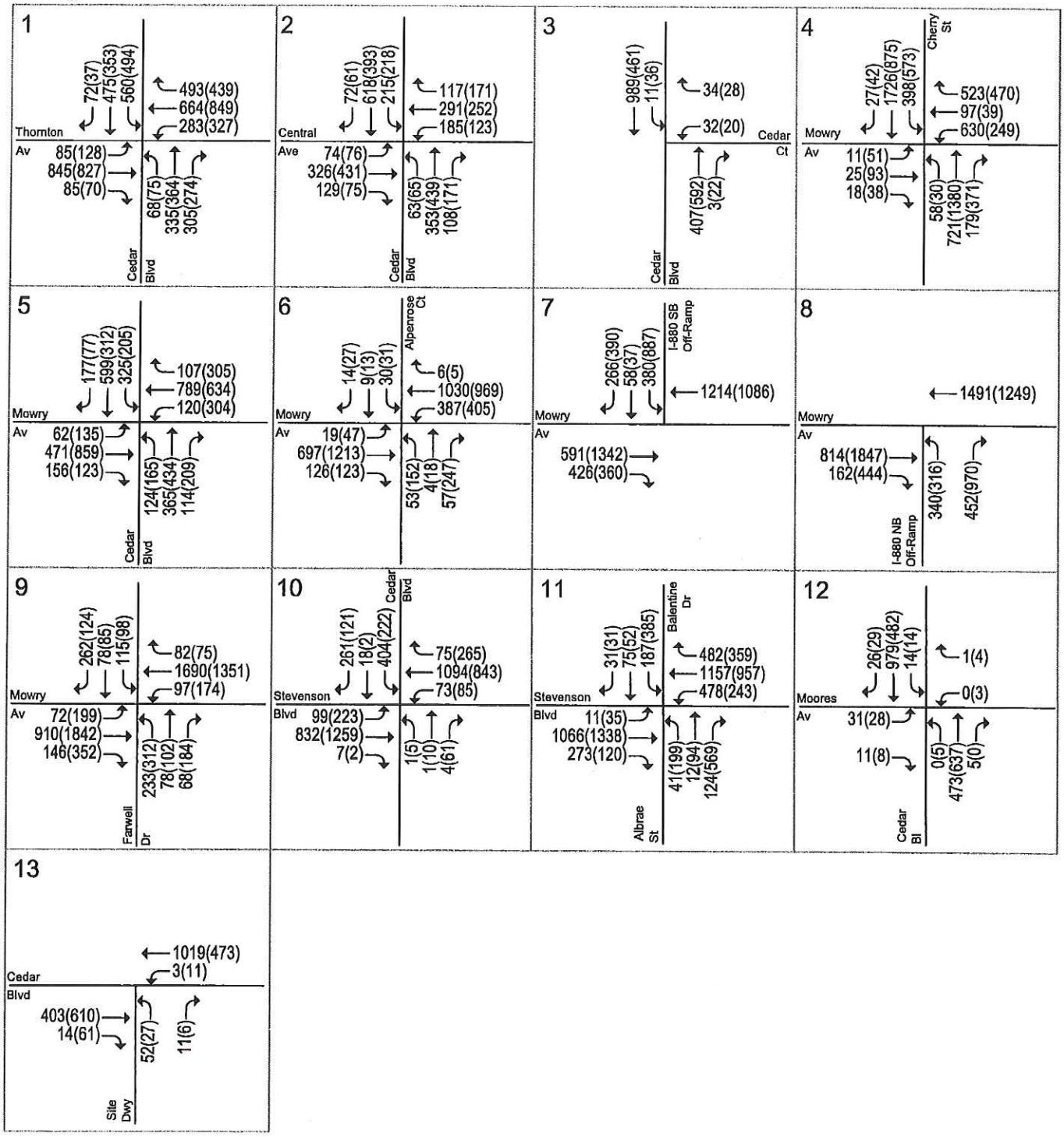

LEGEND

XX(XX) =AM(PM) Peak-Hour Traffic Volumes

Figure 10
Near-Term Background Plus Project Traffic Volumes

HEXAGON

Table 10
Background Plus Project Intersection Levels of Service

Intersection	LOS Standard [1]	Peak Hour	Background Avg. Delay [2]	Background LOS	Project Avg. Delay [2]	Project LOS	Incr. In Avg. Delay
Signalized Intersections:							
Cedar Blvd and Thornton Ave	LOS C	AM	36.9	D	37.1	D	0.2
		PM	44.2	D	44.5	D	0.3
Cedar Blvd and Central Ave	LOS C	AM	25.1	C	25.6	C	0.5
		PM	21.9	C	22.2	C	0.3
Cherry St and Mowry Ave	LOS C	AM	56.0	E	56.6	E	0.6
		PM	31.2	C	30.9	C	-0.3
Cedar Blvd and Mowry Ave	LOS C	AM	30.3	C	30.7	C	0.4
		PM	38.3	D	38.6	D	0.3
Alpenrose Ct and Mowry Ave	LOS C	AM	19.0	B	18.6	B	-0.4
		PM	26.9	C	24.9	C	-2.0
I-880 SB Ramps and Mowry Ave	LOS C	AM	8.7	A	8.7	A	0.0
		PM	11.6	B	11.6	B	0.0
I-880 NB Ramps and Mowry Ave	LOS D	AM	9.4	A	9.3	A	-0.1
		PM	12.7	B	12.7	B	0.0
Farwell Dr and Mowry Ave	LOS D	AM	24.7	C	24.6	C	-0.1
		PM	27.8	C	27.9	C	0.1
Cedar Blvd and Stevenson Blvd	LOS C	AM	22.8	C	22.9	C	0.1
		PM	30.3	C	30.3	C	0.0
Albrae St/Balentine Dr and Stevenson Bl	LOS C	AM	21.4	C	21.4	C	0.0
		PM	26.3	C	26.3	C	0.0
Cedar Blvd and Moores Ave	LOS C	AM	13.1	B	13.2	B	0.1
		PM	17.0	B	17.1	B	0.1
Unsignalized Intersections:							
Cedar Blvd and Cedar Ct[3]	NA	AM	0.2/17.6	A/C	0.8/15.4	A/C	NA
		PM	0.3/13.8	A/B	0.9/14.6	A/B	NA
Project Driveway and Cedar Blvd[3]	NA	AM	--	--	0.8/19.3	A/C	NA
		PM	--	--	0.6/17.6	A/C	NA

[1] Assumes level of service standard of LOS C in Newark and LOS D in Fremont.
[2] Signalized intersection levels of service and delays reported are for overall average delay. Unsignalized intersection delays and LOS reported are for both overall average delay / average delay on the worst approach.
[3] Side street stop controlled Intersection.

Table 11
Background Plus Project Freeway Ramp V/C Ratios

			Background Conditions		Project Conditions		
Freeway Ramp	Peak Hour	Capacity (vphpl)[1]	Volume	V/C Ratio[2]	Project Trips	Total Volume	V/C Ratio[2]
EB Mowry Ave to SB I-880	AM	450	408	0.91	18	426	0.95
	PM	900	381	0.42	-21	360	0.40
EB Mowry Ave to NB I-880	AM	900	179	0.20	-17	162	0.18
	PM	510	483	0.95	-39	444	0.87

[1] Ramp Capacity obtained from the Alameda County Transportation Model Update, August 9, 2011. HOV Lanes ignored for this calculation.
[2] V/C ratio = Volume-to-capacity ratio

5. Cumulative Conditions

According to California Environmental Quality Act (CEQA) guidelines, cumulative conditions should reflect approved, pending and foreseeable development projects. In the case of the proposed project, in addition to the existing motel, the site has an existing approved entitlement for 200,000 s.f. of retail which could be constructed and occupied without any additional CEQA review.

For the cumulative analysis, the project trip generation was estimated assuming credit for the full occupancy of its existing entitlement. The trip credit for the motel at industry-average occupancy was estimated by applying ITE trip generation rates applicable to motels. The credit for the 200,000 s.f. of retail entitlement for the site was estimated by applying ITE trip generation rates applicable to shopping centers. Table 12 shows that, when the existing site entitlement is considered, the project would result in considerably lower traffic volumes in both peak hours. During the AM peak hour, the project would result in 151 fewer trips. During the PM peak hour, the project would result in 489 fewer trips. For this reason, it was determined that no further traffic analysis is needed for the cumulative scenario. Relative to its existing entitlement, the project would generally reduce the number of trips and delays at the intersections and freeway ramps in the project vicinity.

Table 12
Existing Entitlement Trip Generation

Land Use	Size	Unit	Daily Rate	Daily Trips	AM Peak Hour Rate	AM Peak Hour In	AM Peak Hour Out	AM Peak Hour Total	PM Peak Hour Rate	PM Peak Hour In	PM Peak Hour Out	PM Peak Hour Total
Project												
Condominium/Townhome	228	d.u.	5.81	1,325	0.44	17	83	100	0.52	79	39	119
Single-Family Detached	51	d.u.	9.52	486	0.75	10	29	38	1.00	32	19	51
Total Gross Project Trips						27	112	139		112	58	170
Entitled Uses												
Shopping Center	200	ksf	42.70	8,540	0.96	119	73	192	3.71	356	386	742
Pass-by[1]										-89	-96	-186
Primary						119	73	192		267	289	557
Motel	217	rooms	5.63	1,222	0.45	35	62	98	0.47	55	47	102
Total Gross Entitlement						154	135	290		322	336	658
TOTAL NET PROJECT TRIPS						-128	-24	-151		-211	-278	-489

[1] Pass-by rate of 25% assumed for shopping center in PM peak hour.
[2] Gross existing site trips = motel trips plus shopping center primary trips; pass-by trips are excluded.

6. Other Transportation Issues

This chapter presents an analysis of other transportation issues associated with the project, including:

- Vehicular site access and on-site circulation
- Potential impacts to bike, pedestrian and transit facilities

Unlike the level of service impact methodology, which is adopted by the Newark and Fremont City Councils, the analyses in this chapter are based on professional judgment in accordance with the standards and methods employed by the traffic engineering community.

Site Access & Circulation

The project site plan shows the site will have access at two locations: on Cedar Boulevard at the northwest end of the site and on Cedar Court at the east end of the site. At the northwest site entrance, Cedar Boulevard is approximately 65 feet wide, with four lanes and a two-way center turn lane. There is an existing left-turn pocket into the site on Cedar Boulevard. Similarly, there is a left-turn pocket on Cedar Boulevard at Cedar Court. The site driveway on Cedar Court is fully accessible without vehicle conflicts.

The site driveway that accesses Cedar Boulevard is approximately 120 feet long between Cedar Boulevard and the main street on site. The site driveway that accesses Cedar Court is 150 feet long between Cedar Court and the main street on site. The vehicle queues inbound and outbound at the project driveways would rarely exceed two vehicles (or about 50 feet). Thus, the vehicle storage proposed would be adequate. In addition, there is adequate sight distance of several hundred feet at the driveway on Cedar Boulevard and at the intersection of Cedar Court with Cedar Boulevard.

Both driveways would be gated. For the site driveway on Cedar Boulevard, inbound vehicles would arrive from the westbound left turn movement and the eastbound right turn movement on Cedar Boulevard. Inbound to the project site, the project would generate a total of 17 AM peak hour trips and 72 PM peak hour trips at the project driveway. During the AM peak hour, vehicles would therefore enter the site at an average rate of approximately one vehicle every three-and-a-half minutes. During the PM peak hour, vehicles would enter the site at an average rate of approximately one vehicle every 50 seconds. According to the publication "Parking" by Weant and Levinson, the typical capacity for a single lane card coded reader is 350 vehicles per hour. Based on the formula provided in that publication, inbound queues at the gated entrance during the AM and PM peak hours would rarely exceed one or two vehicles (or about 50 feet). The distance between the gated entrance and Cedar Boulevard would be

approximately 100 feet. Thus, the proposed single lane design would have sufficient capacity to accommodate the anticipated traffic demand.

For the site driveway on Cedar Court, inbound vehicles at the site driveway would arrive via a southbound right turn movement from Cedar Court. Inbound to the project site, the project would generate a total of 10 AM peak hour trips and 39 PM peak hour trips at the project driveway. During the AM peak hour, vehicles would therefore enter the site at an average rate of approximately one vehicle every six minutes. During the PM peak hour, vehicles would enter the site at an average rate of approximately one vehicle every one-and-a-half minutes. Inbound queues at the gated entrance would rarely exceed one vehicle (or 25 feet) in either of the peak hours. The distance between the gated entrance and Cedar Court would be 25 feet. Thus, the proposed single lane design would have sufficient capacity to accommodate the anticipated traffic demand 95 percent of the time. Were any additional backup were to occur, it would spill back into the cul-de-sac where traffic volumes are extremely low. The radius of the cul-de-sac would still permit adequate traffic movements for non-project traffic.

The main street on site runs west to east along the northern half of the site, parallel to Cedar Boulevard. At the east end, it turns 90 degrees to the right and parallels Cedar Court. There is also a north-south street on site that extends southward from the main street. There are several other smaller streets that circulate through the site, as well as many dead-end streets. The dead-end streets vary in length from about 80 feet to about 240 feet. It appears that all of the dead-end streets directly serve the residential units only, each of which has its own driveway. Therefore, the fact that the streets dead-end should generally not cause vehicle turnaround problems. The main streets on site are wide enough to permit parking on street. At the southeast end of the site, where the streets are narrower, there are perpendicular parking spaces provided.

> **Recommendation:** At the time of this analysis, details of the site design are still being contemplated. Prior to final design, it is recommended that the site integrate pedestrian and bicycle access with the existing on street sidewalks, crosswalks, and bike lanes to provide convenient pedestrian and bicycle circulation. In addition, the site design should ensure that there is adequate space onsite for trucks, garbage collection, and emergency vehicles.

Pedestrian, Bicycle, & Transit Facilities

According to the U.S. Census, pedestrian trips comprise approximately one percent of the total commute mode share in the City of Newark. For the proposed project, this would equate to approximately one or two new pedestrian commute trips during the AM and PM peak hours. In addition, the project would generate some pedestrian trips from existing transit stops and recreational/retail areas. As described previously, there are existing sidewalks on all streets in the vicinity of the project. In addition, there are crosswalks at nearly all of the nearby intersections. The proposed project would not create pedestrian demand beyond the current capacity of the existing sidewalks.

The U.S. Census has determined that bicycle trips comprise one half of one percent of the total commute mode share in the City of Newark. For the proposed project, this would equate to approximately one new commute bike trip during the AM and PM peak hours. Generally, the volume of bicycle trips generated by the project would not exceed the bicycle-carrying capacity of streets surrounding the site, and the increase in bicycle trips would not, by itself, require new off-site bicycle facilities. However, per the Alameda Countywide Bicycle Plan, the project should provide the prescribed number of Class I parking (lockers or guarded parking) and Class II bicycle spaces (bike racks).

The current transit service in the project vicinity consists of AC Transit operated bus routes. Several bus stops are located near the site. There are bus stops on Cedar Boulevard at Moores Avenue that serve bus lines 200 and 232. These stops are located about 600 feet from the northeast corner of the site, adjacent to Cedar Court. Bus stops for bus lines 200 and 232 are also located on Cedar Boulevard just 150 feet west from the northwest corner of the site. There are bus stops on Mowry Avenue west of Alpenrose Court that serve bus lines 200, 212, 216, 232, and 251. These stops are located about 600 feet from the southwest corner of the site. A bus stop for bus line 200 is also located on Mowry Avenue

east of Alpenrose Court. That bus stop is about 500 feet from the southwest corner of the project site. It appears from the site plan that there may be a pedestrian walkway planned to provide direct access between the site and Alpenrose Court. A pedestrian pathway to Alpenrose Court would significantly reduce walking times to the bus stops on Mowry Avenue. The distances mentioned above assume that such access would be provided. According to the U.S. Census, bus trips comprise approximately two percent of the total commute mode share in the City of Newark. For the proposed project, this would equate to three new commute transit trips during the AM and PM peak hours. The existing bus service in the project vicinity has available capacity to accommodate the increase in bus riders from the proposed project.

Mowry Residential Development
Transportation Impact Analysis

Technical Appendices

July 2014

Appendix A
Traffic Counts

All Traffic Data Services
2187 Kingsbury Cir
Santa Clara, CA, 95054
www.Alltrafficdata.net

#1

File Name : ~~#3~~ CEDAR&THORNTONAM
Site Code : 00000000
Start Date : 1/28/2014
Page No : 2

	CEDAR BLVD Southbound					THORNTON AVE Westbound					CEDAR BLVD Northbound					THORNTON AVE Eastbound					
Start Time	Right	Thru	Left	Peds	App. Total	Right	Thru	Left	Peds	App. Total	Right	Thru	Left	Peds	App. Total	Right	Thru	Left	Peds	App. Total	Int. Total
Peak Hour Analysis From 07:00 AM to 08:45 AM - Peak 1 of 1																					
Peak Hour for Entire Intersection Begins at 07:30 AM																					
07:30 AM	13	91	133	0	237	72	131	58	3	264	47	93	23	1	164	24	154	15	0	193	858
07:45 AM	22	107	153	0	282	128	162	65	1	356	60	100	17	8	185	14	169	23	0	206	1029
08:00 AM	18	123	143	1	285	157	162	70	0	389	51	75	15	0	141	21	188	26	4	239	1054
08:15 AM	19	149	131	1	300	136	142	67	1	346	65	52	10	1	128	26	160	21	7	213	987
Total Volume	72	470	560	2	1104	493	597	260	5	1355	223	320	65	10	618	84	671	85	11	851	3928
% App. Total	6.5	42.6	50.7	0.2		36.4	44.1	19.2	0.4		36.1	51.8	10.5	1.6		9.9	78.8	10	1.3		
PHF	.818	.789	.915	.500	.920	.785	.921	.929	.417	.871	.858	.800	.707	.313	.835	.840	.892	.817	.393	.890	.932

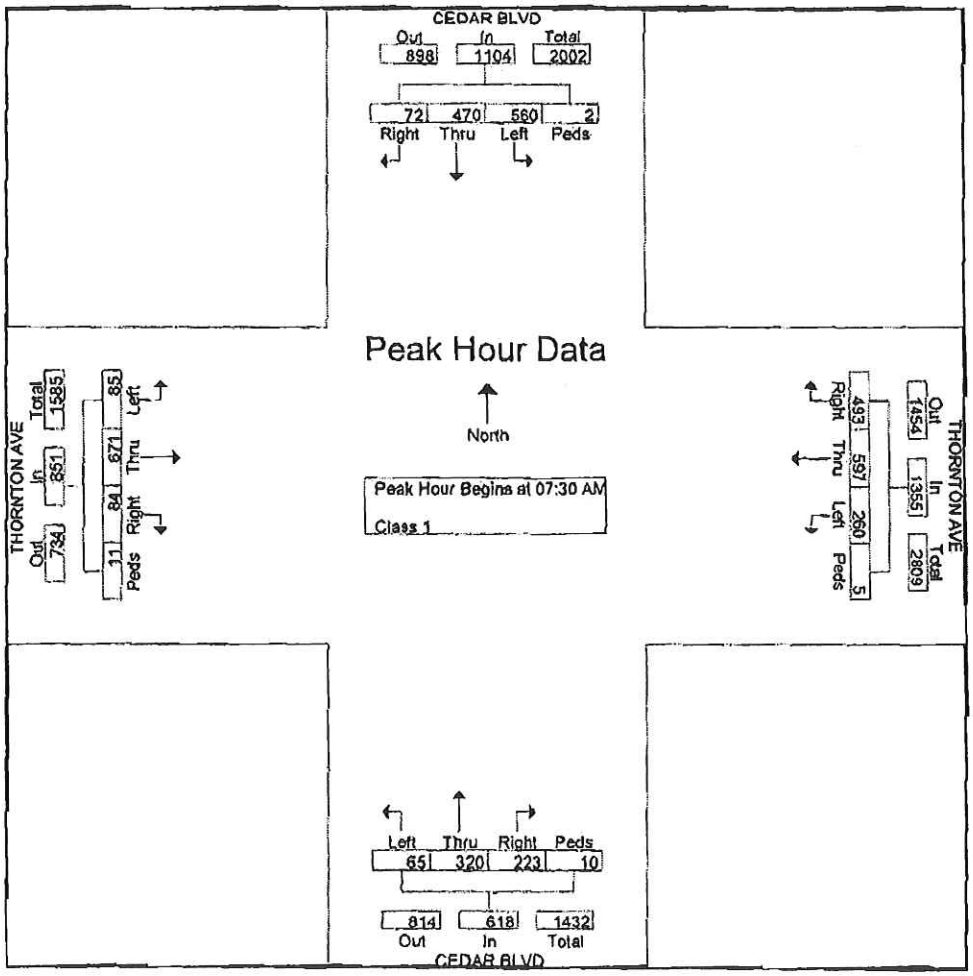

All Traffic Data Services
2187 Kingsbury Cir
Santa Clara, CA, 95054
www.Alltrafficdata.net

#1

File Name : ~~#3~~ CEDAR&THORNTONPM
Site Code : 00000000
Start Date : 1/28/2014
Page No : 2

	CEDAR BLVD Southbound					THORNTON AVE Westbound					CEDAR BLVD Northbound					THORNTON AVE Eastbound					
Start Time	Right	Thru	Left	Peds	App. Total	Right	Thru	Left	Peds	App. Total	Right	Thru	Left	Peds	App. Total	Right	Thru	Left	Peds	App. Total	Int. Total
Peak Hour Analysis From 04:00 PM to 05:45 PM - Peak 1 of 1																					
Peak Hour for Entire Intersection Begins at 04:30 PM																					
04:30 PM	2	63	118	0	183	96	168	60	5	329	66	78	18	1	163	17	180	35	1	243	918
04:45 PM	16	66	115	1	197	122	177	59	7	365	42	86	20	4	152	14	179	27	0	220	934
05:00 PM	8	102	129	0	239	118	164	59	1	342	55	97	12	5	169	14	190	34	0	238	988
05:15 PM	12	106	132	0	250	103	156	69	3	331	61	92	23	0	176	22	149	32	0	203	960
Total Volume	37	337	494	1	869	439	665	247	16	1367	224	353	73	10	660	67	708	128	1	904	3800
% App. Total	4.3	38.8	56.8	0.1		32.1	48.6	18.1	1.2		33.9	53.5	11.1	1.5		7.4	78.3	14.2	0.1		
PHF	.617	.795	.936	.250	.869	.900	.939	.895	.571	.936	.848	.910	.793	.500	.938	.761	.932	.914	.250	.930	.962

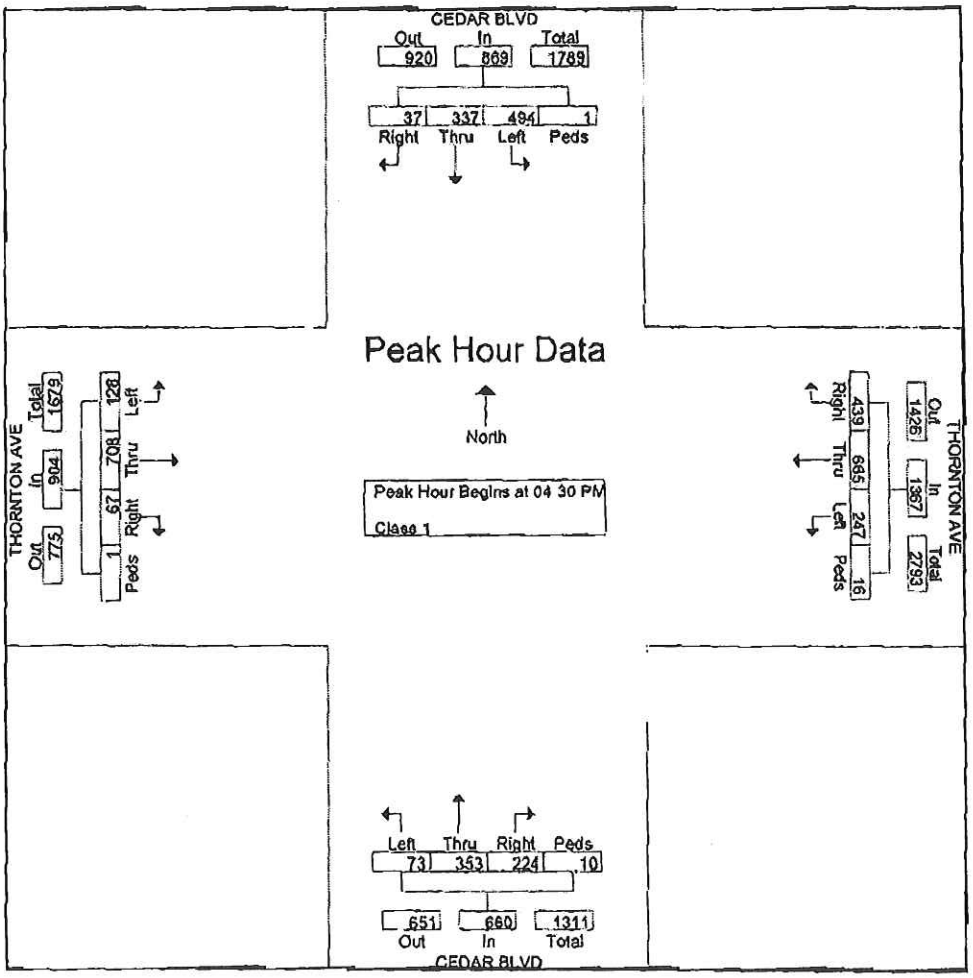

All Traffic Data Services
2187 Kingsbury Cir
Santa Clara, CA, 95054
www.Alltrafficdata.net

#2

File Name : ~~#8~~ CEDAR&CENTRALAM
Site Code : 9
Start Date : 5/14/2014
Page No : 2

	CEDAR BLVD Southbound					CENTRAL AVE Westbound					CEDAR BLVD Northbound					CENTRAL AVE Eastbound					
Start Time	Right	Thru	Left	Peds	App. Total	Right	Thru	Left	Peds	App. Total	Right	Thru	Left	Peds	App. Total	Right	Thru	Left	Peds	App. Total	Int. Total
Peak Hour Analysis From 07:00 AM to 08:45 AM - Peak 1 of 1																					
Peak Hour for Entire Intersection Begins at 07:30 AM																					
07:30 AM	15	175	44	0	234	24	49	26	1	100	19	107	20	0	146	57	55	16	0	128	608
07:45 AM	24	128	61	1	214	21	86	49	1	157	27	95	23	1	146	20	91	13	0	124	641
08:00 AM	20	149	58	0	227	33	70	49	0	152	23	44	9	2	78	24	85	22	0	131	588
08:15 AM	13	148	52	0	213	39	71	56	0	166	22	42	7	2	73	28	76	23	2	129	580
Total Volume	72	600	215	1	888	117	276	179	2	574	91	288	59	5	443	129	307	74	2	512	2417
% App Total	8.1	67.6	24.2	0.1		20.4	48.1	31.2	0.3		20.5	65	13.3	1.1		25.2	60	14.5	0.4		
PHF	.750	.857	.881	.250	.949	.750	.802	.814	.500	.870	.843	.673	.641	.625	.759	.566	.843	.804	.250	.977	.943

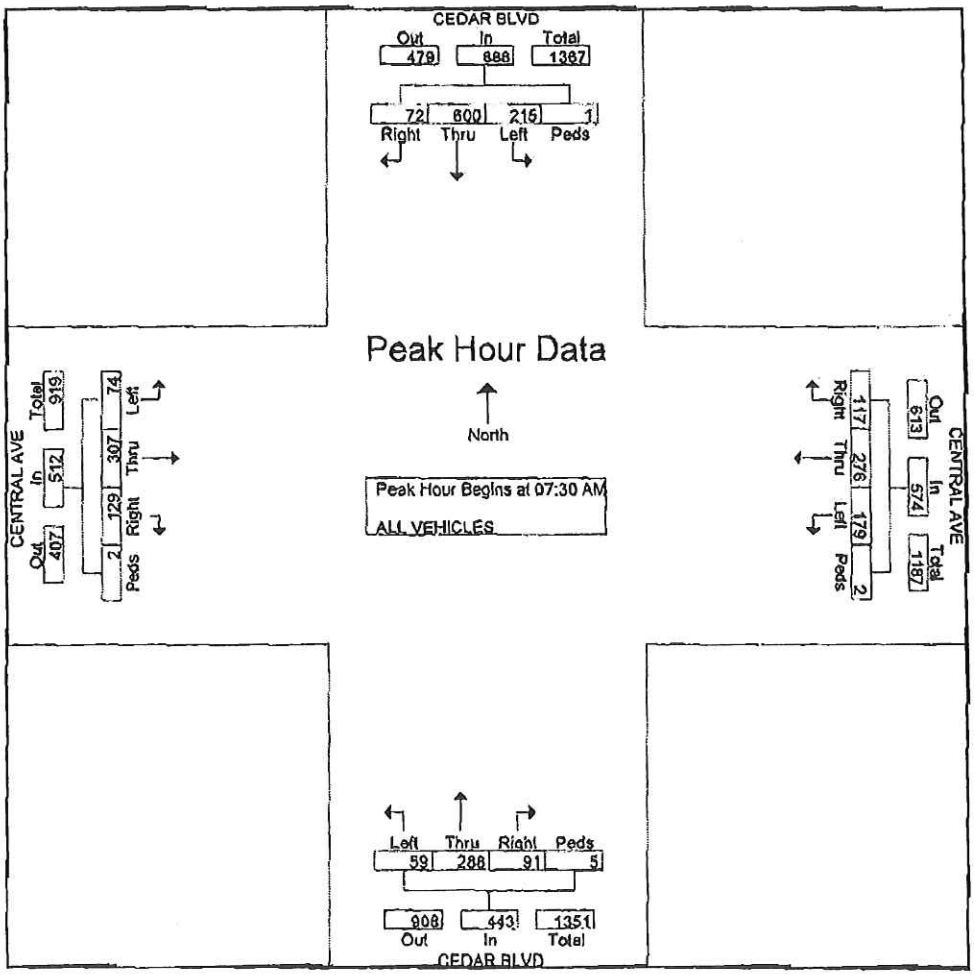

All Traffic Data Services
2187 Kingsbury Cir
Santa Clara, CA, 95054
www.Alltrafficdata.net

#2

File Name : ~~#~~ CEDAR&CENTRALPM
Site Code : 9
Start Date : 5/14/2014
Page No : 2

	CEDAR BLVD Southbound					CENTRAL AVE Westbound					CEDAR BLVD Northbound					CENTRAL AVE Eastbound					
Start Time	Right	Thru	Left	Peds	App Total	Right	Thru	Left	Peds	App Total	Right	Thru	Left	Peds	App Total	Right	Thru	Left	Peds	App Total	Int. Total
Peak Hour Analysis From 04:00 PM to 05:45 PM - Peak 1 of 1																					
Peak Hour for Entire Intersection Begins at 05:00 PM																					
05:00 PM	16	63	46	1	126	47	59	26	0	132	38	93	11	0	142	18	96	15	0	129	529
05:15 PM	17	80	52	0	149	37	45	23	0	105	48	94	17	0	159	11	93	21	0	125	538
05:30 PM	14	79	58	0	151	42	61	36	0	139	50	104	18	0	172	21	111	20	0	152	614
05:45 PM	14	72	62	0	148	45	66	18	0	129	22	86	17	0	125	16	112	20	0	148	550
Total Volume	61	294	218	1	574	171	231	103	0	505	158	377	63	0	598	66	412	76	0	554	2231
% App. Total	10.6	51.2	38	0.2		33.9	45.7	20.4	0		26.4	63	10.5	0		11.9	74.4	13.7	0		
PHF	.897	.919	.879	.250	.950	.910	.875	.715	.000	.908	.790	.906	.875	.000	.869	.786	.920	.905	.000	.911	.909

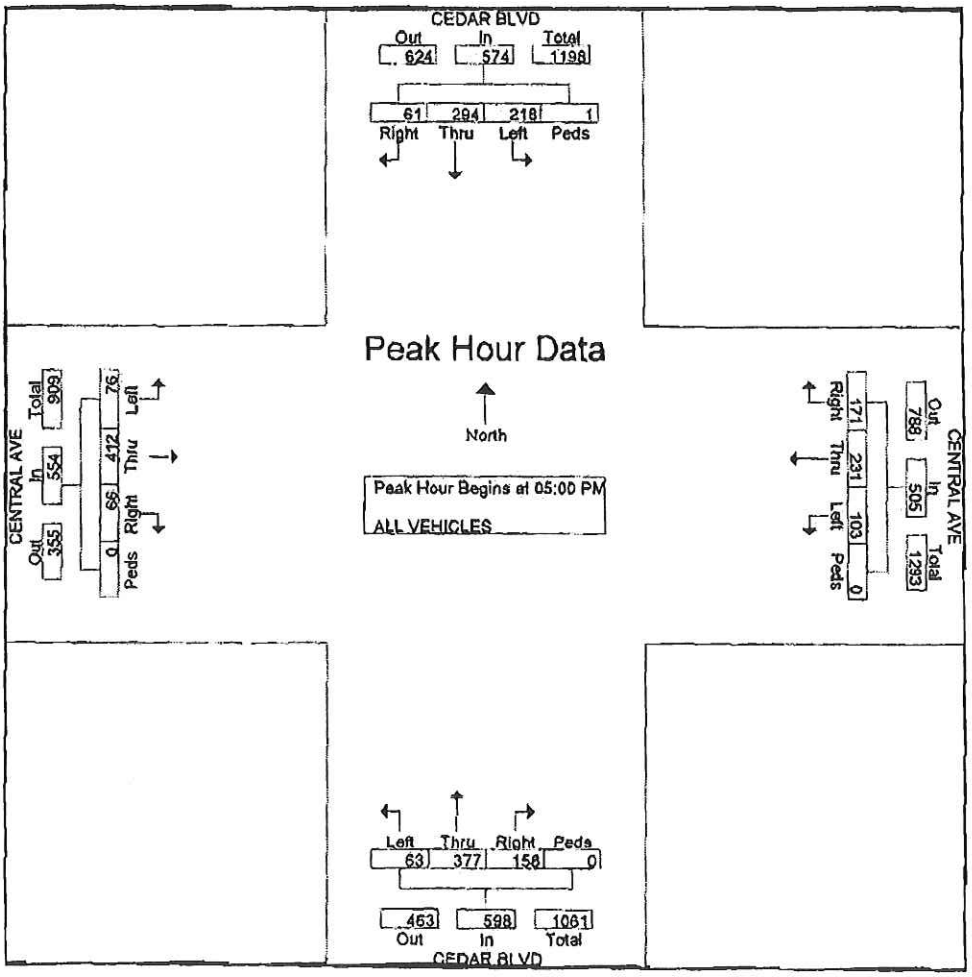

All Traffic Data Services
2187 Kingsbury Cir
Santa Clara, CA, 95054
www.Alltrafficdata.net

#3

File Name : ~~#2~~ CEDAR&CEDARAM
Site Code : 00000000
Start Date : 4/2/2014
Page No : 2

	CEDAR BLVD Southbound					CEDAR CT Westbound					CEDAR BLVD Northbound					CEDAR CT Eastbound					
Start Time	Right	Thru	Left	Peds	App. Total	Right	Thru	Left	Peds	App. Total	Right	Thru	Left	Peds	App. Total	Right	Thru	Left	Peds	App. Total	Int. Total
Peak Hour Analysis From 07:00 AM to 08:45 AM - Peak 1 of 1																					
Peak Hour for Entire Intersection Begins at 07:30 AM																					
07:30 AM	0	298	1	0	299	0	0	5	1	6	1	135	0	0	136	0	0	0	0	0	441
07:45 AM	0	196	1	0	197	1	0	3	0	4	0	122	0	0	122	0	0	0	0	0	323
08:00 AM	0	213	1	0	214	0	0	1	1	2	0	48	0	0	48	0	0	0	0	0	264
08:15 AM	0	248	0	0	248	1	0	6	0	7	0	43	0	0	43	0	0	0	0	0	298
Total Volume	0	955	3	0	958	2	0	15	2	19	1	348	0	0	349	0	0	0	0	0	1326
% App. Total	0	99.7	0.3	0		10.5	0	78.9	10.5		0.3	99.7	0	0		0	0	0	0		
PHF	.000	.801	.750	.000	.801	.500	.000	.625	.500	.679	.250	.644	.000	.000	.642	.000	.000	.000	.000	.000	.752

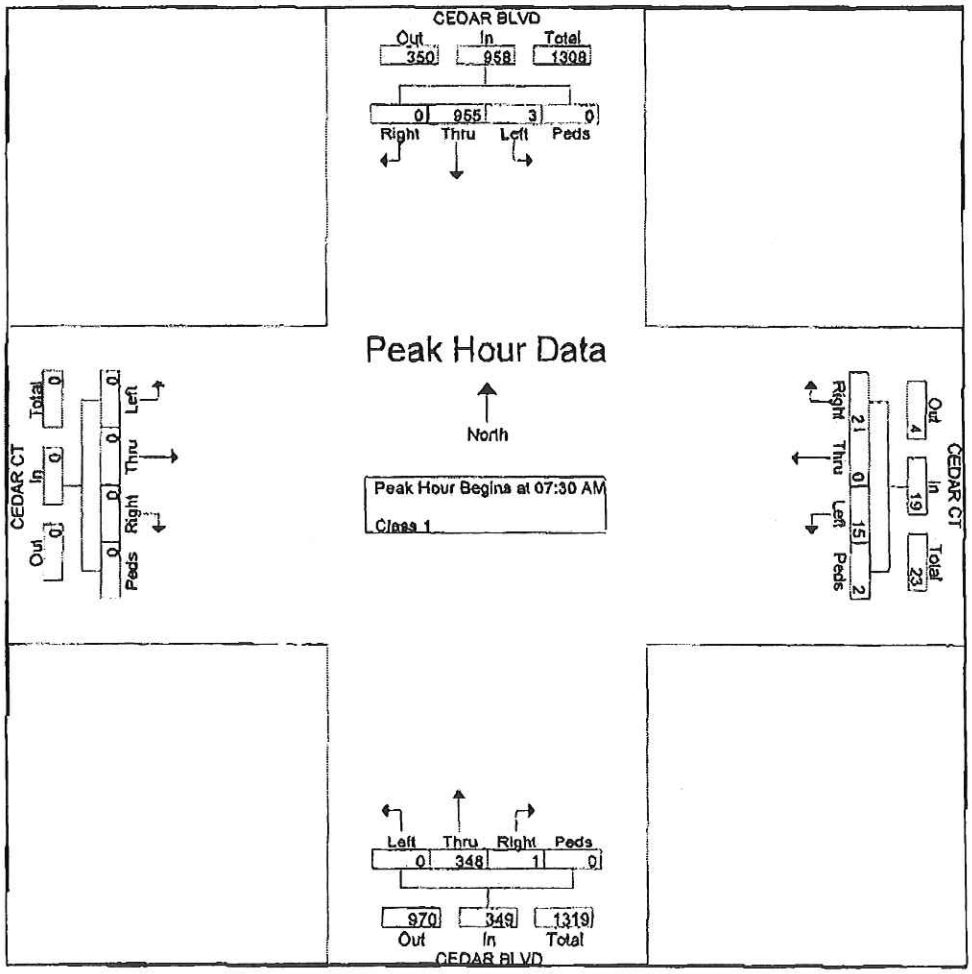

All Traffic Data Services
2187 Kingsbury Cir
Santa Clara, CA, 95054
www.Alltrafficdata.net

#3

File Name : ~~#2~~ CEDAR&CEDARPM
Site Code : 00000000
Start Date : 4/2/2014
Page No : 2

	CEDAR BLVD Southbound					CEDAR CT Westbound					CEDAR BLVD Northbound					CEDAR CT Eastbound					
Start Time	Right	Thru	Left	Peds	App. Total	Right	Thru	Left	Peds	App. Total	Right	Thru	Left	Peds	App. Total	Right	Thru	Left	Peds	App. Total	Int. Total
Peak Hour Analysis From 04:00 PM to 05:45 PM - Peak 1 of 1																					
Peak Hour for Entire Intersection Begins at 05:00 PM																					
05:00 PM	0	89	1	0	90	4	0	3	0	7	4	146	0	0	150	0	0	0	0	0	247
05:15 PM	0	110	0	0	110	3	0	3	1	7	4	120	0	0	124	0	0	0	0	0	241
05:30 PM	0	104	2	0	106	3	0	3	2	8	3	134	0	0	137	0	0	0	0	0	251
05:45 PM	0	98	1	0	99	2	0	2	0	4	4	137	0	0	141	0	0	0	0	0	244
Total Volume	0	401	4	0	405	12	0	11	3	26	15	537	0	0	552	0	0	0	0	0	983
% App. Total	0	99	1	0		46.2	0	42.3	11.5		2.7	97.3	0	0		0	0	0	0		
PHF	.000	.911	.500	.000	.920	.750	.000	.917	.375	.813	.938	.920	.000	.000	.920	.000	.000	.000	.000	.000	.979

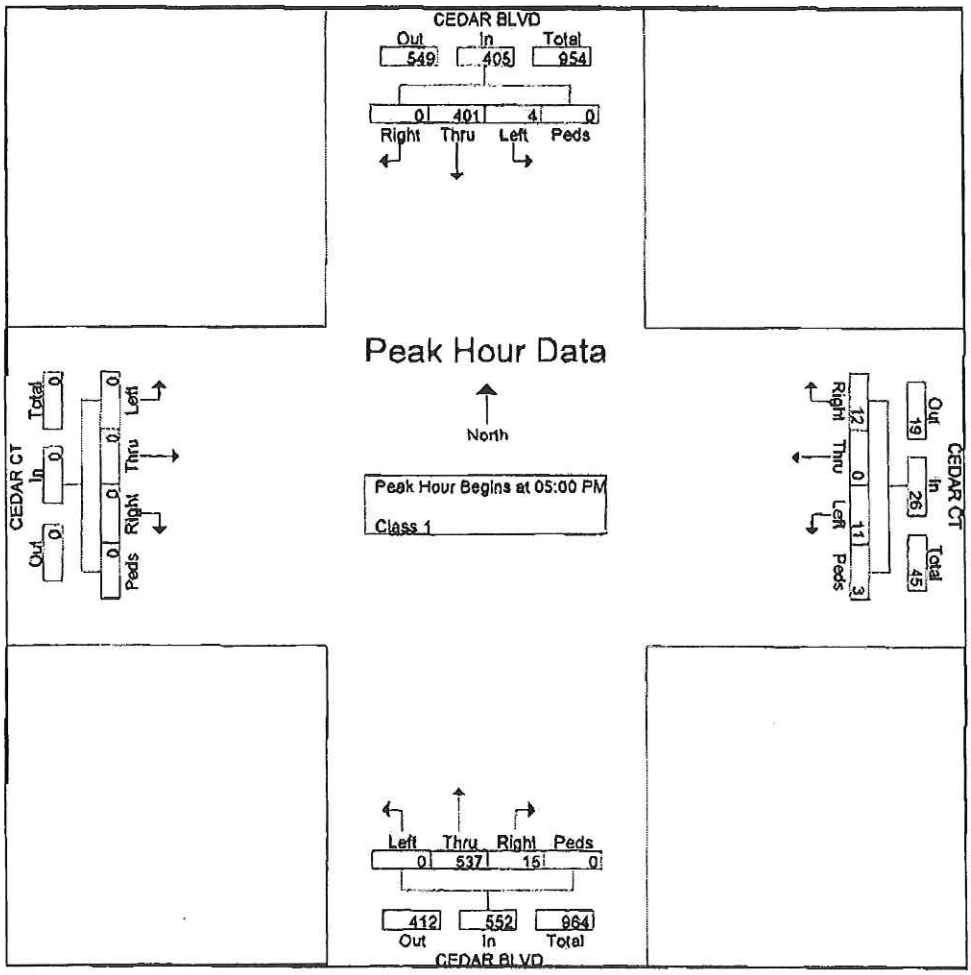

All Traffic Data Services
2187 Kingsbury Cir
Santa Clara, CA, 95054
www.Alltrafficdata.net

#4

File Name : ~~#6~~ CHERRY&MOWRYAM
Site Code : 00000000
Start Date : 1/28/2014
Page No : 2

	CHERRY ST Southbound					MOWRY AVE Westbound					CHERRY ST Northbound					MOWRY AVE Eastbound					
Start Time	Right	Thru	Left	Peds	App. Total	Right	Thru	Left	Peds	App. Total	Right	Thru	Left	Peds	App. Total	Right	Thru	Left	Peds	App. Total	Int. Total
Peak Hour Analysis From 07:00 AM to 08:45 AM - Peak 1 of 1																					
Peak Hour for Entire Intersection Begins at 07:30 AM																					
07 30 AM	6	363	126	0	495	123	15	115	1	254	20	141	6	0	167	5	5	4	0	14	930
07:45 AM	6	384	54	1	445	136	29	131	2	298	15	168	8	0	191	3	7	2	1	13	947
08:00 AM	3	353	54	0	410	68	29	124	0	221	19	153	6	1	179	5	8	4	1	18	828
08:15 AM	12	393	40	0	445	68	24	105	0	197	22	82	9	0	113	5	5	1	2	13	768
Total Volume	27	1493	274	1	1795	395	97	475	3	970	76	544	29	1	650	18	25	11	4	58	3473
% App. Total	1.5	83.2	15.3	0.1		40.7	10	49	0.3		11.7	83.7	4.5	0.2		31	43.1	19	6.9		
PHF	.563	.950	.544	.250	.907	.726	.836	.906	.375	.814	.864	.810	.806	.250	.851	.900	.781	.688	.500	.806	.917

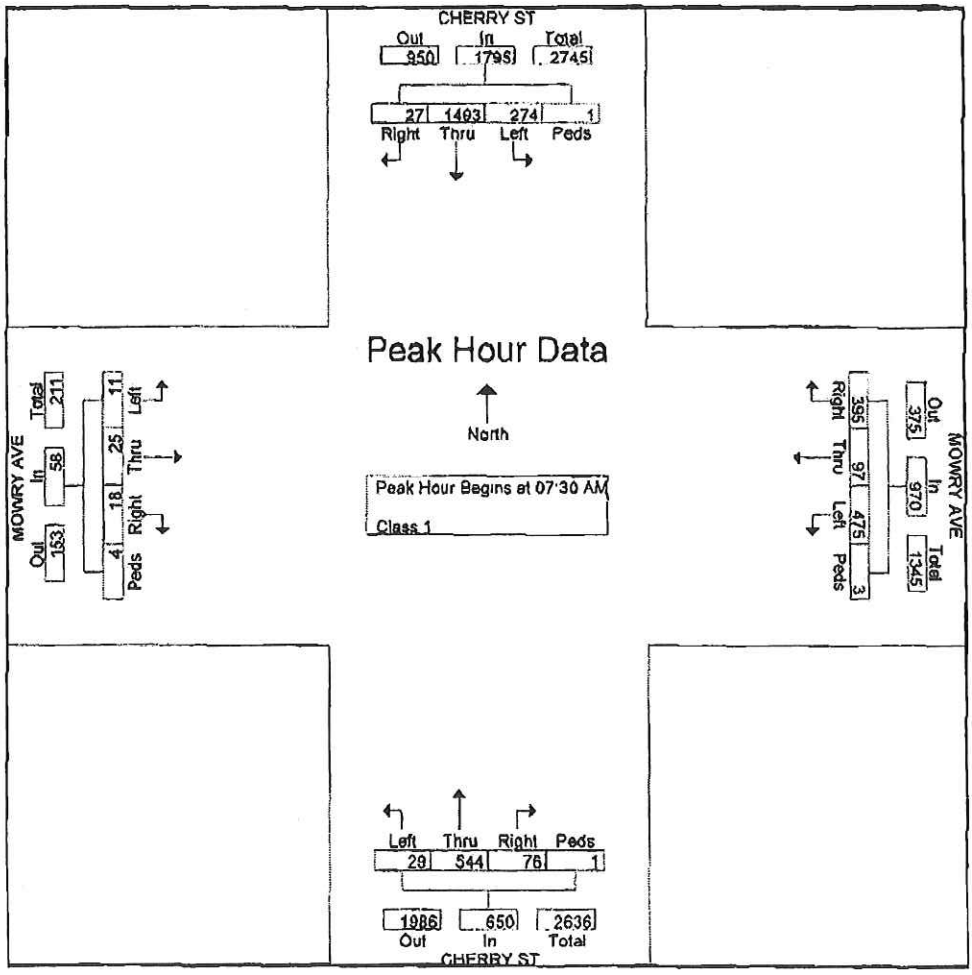

All Traffic Data Services
2187 Kingsbury Cir
Santa Clara, CA, 95054
www.Alltrafficdata.net

#4

File Name : ~~#0~~ CHERRY&MOWRYPM
Site Code : 00000000
Start Date : 1/28/2014
Page No : 2

	CHERRY ST Southbound					MOWRY AVE Westbound					CHERRY ST Northbound					MOWRY AVE Eastbound					
Start Time	Right	Thru	Left	Peds	App. Total	Right	Thru	Left	Peds	App. Total	Right	Thru	Left	Peds	App. Total	Right	Thru	Left	Peds	App. Total	Int. Total
Peak Hour Analysis From 04:00 PM to 05:45 PM - Peak 1 of 1																					
Peak Hour for Entire Intersection Begins at 05:00 PM																					
05:00 PM	6	159	114	0	279	87	12	23	1	123	57	247	6	0	310	13	25	13	0	51	763
05:15 PM	14	143	101	1	259	69	8	27	1	105	71	330	6	0	407	5	23	17	0	45	816
05:30 PM	9	162	127	0	298	70	11	37	0	118	73	282	7	0	362	13	20	14	0	47	825
05:45 PM	13	164	79	0	256	81	8	43	4	136	72	278	4	0	354	7	25	7	0	39	785
Total Volume	42	628	421	1	1092	307	39	130	6	482	273	1137	23	0	1433	38	93	51	0	182	3189
% App. Total	3.8	57.5	38.6	0.1		63.7	8.1	27	1.2		19.1	79.3	1.6	0		20.9	51.1	28	0		
PHF	.750	.957	.829	.250	.916	.882	.813	.756	.375	.886	.935	.861	.821	.000	.880	.731	.930	.750	.000	.892	.966

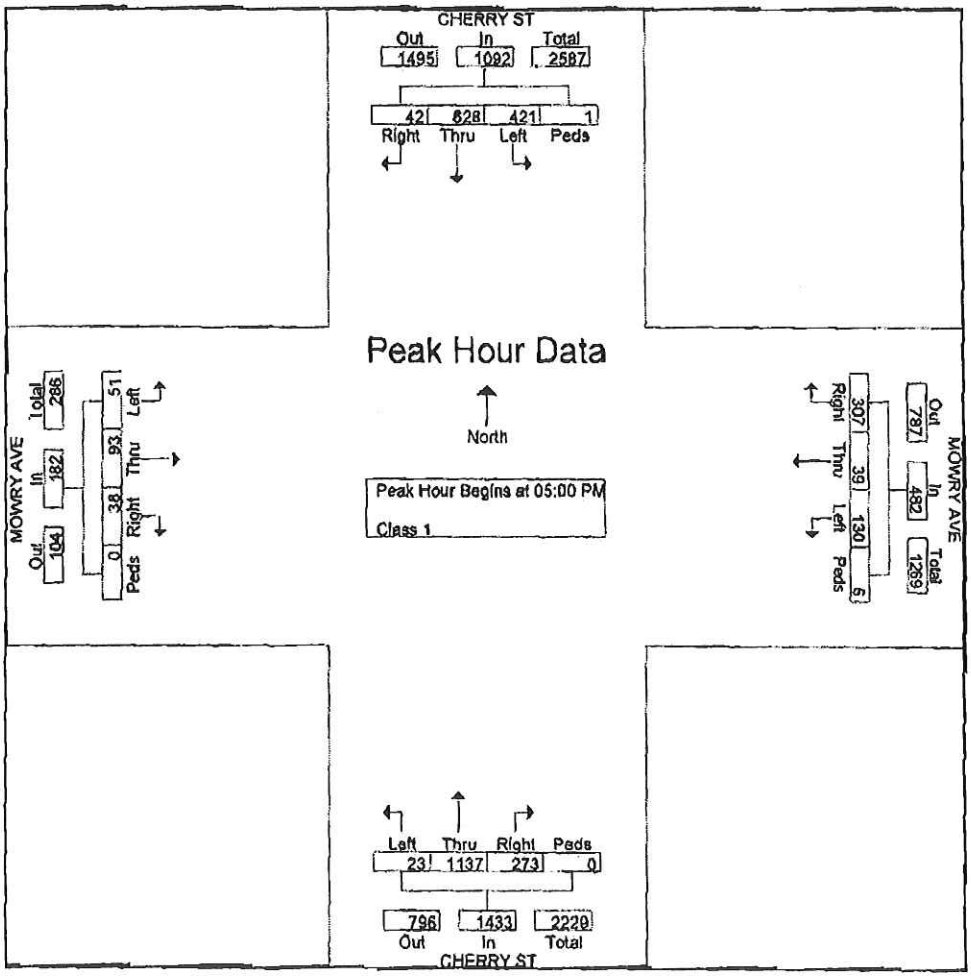

All Traffic Data Services
2187 Kingsbury Cir
Santa Clara, CA, 95054
www.Alltrafficdata.net

#5

File Name : ~~#10~~ CEDAR&MOWRYAM
Site Code : 10
Start Date : 5/14/2014
Page No : 2

	CEDAR BLVD Southbound					MOWRY AVE Westbound					CEDAR BLVD Northbound					MOWRY AVE Eastbound					
Start Time	Right	Thru	Left	Peds	App. Total	Right	Thru	Left	Peds	App. Total	Right	Thru	Left	Peds	App. Total	Right	Thru	Left	Peds	App. Total	Int. Total
Peak Hour Analysis From 07:00 AM to 08:45 AM - Peak 1 of 1																					
Peak Hour for Entire Intersection Begins at 07:30 AM																					
07:30 AM	16	187	43	4	250	19	113	34	0	166	29	163	51	0	243	92	71	7	0	170	829
07:45 AM	41	92	63	3	199	22	142	23	6	193	32	115	44	4	195	32	77	11	0	120	707
08:00 AM	48	120	76	1	245	23	149	24	0	196	11	35	15	0	61	16	67	3	0	86	588
08:15 AM	43	182	86	1	312	27	150	31	1	209	17	19	9	0	45	15	73	9	0	97	663
Total Volume	148	581	268	9	1006	91	554	112	7	764	89	332	119	4	544	155	288	30	0	473	2787
% App. Total	14.7	57.8	26.6	0.9		11.9	72.5	14.7	0.9		16.4	61	21.9	0.7		32.8	60.9	6.3	0		
PHF	.771	.777	.779	.563	.806	.843	.923	.824	.292	.914	.695	.509	.583	.250	.560	.421	.935	.682	.000	.896	.840

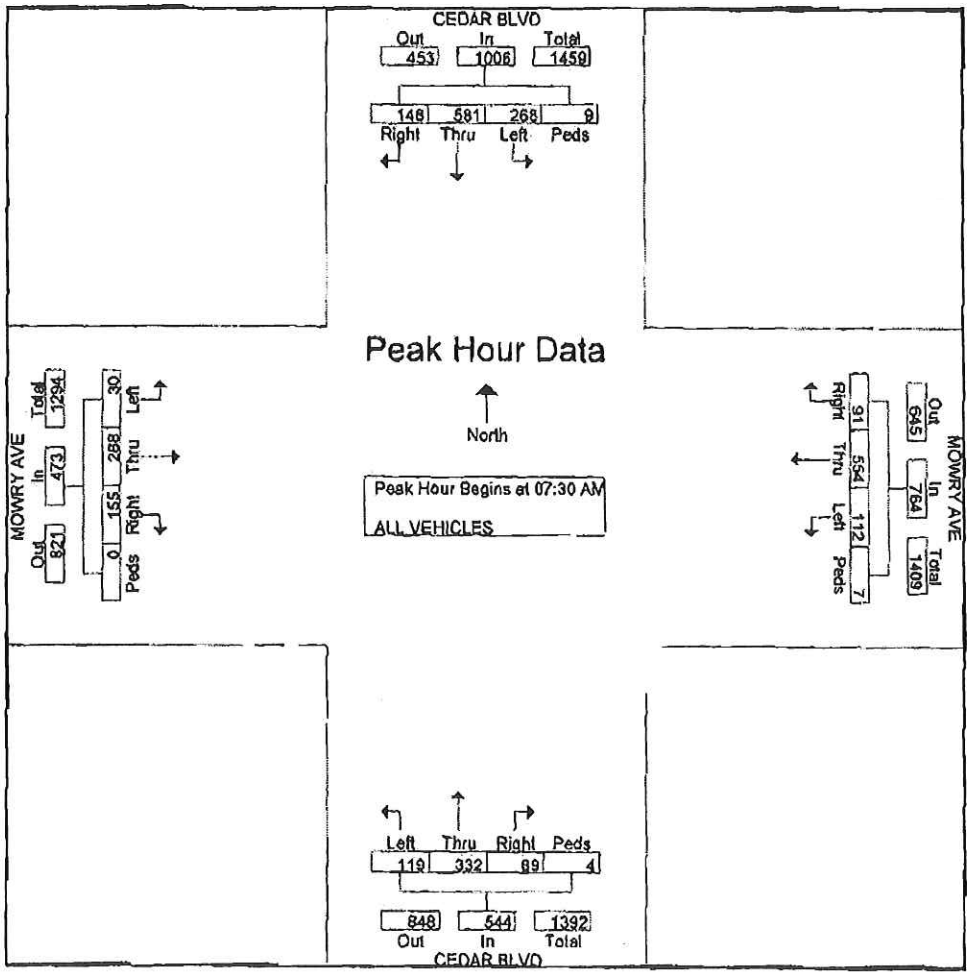

All Traffic Data Services
2187 Kingsbury Cir
Santa Clara, CA, 95054
www.Alltrafficdata.net

#5

File Name : #~~10~~ CEDAR&MOWRYPM
Site Code : 10
Start Date : 5/14/2014
Page No : 2

	CEDAR BLVD Southbound					MOWRY AVE Westbound					CEDAR BLVD Northbound					MOWRY AVE Eastbound					
Start Time	Right	Thru	Left	Peds	App. Total	Right	Thru	Left	Peds	App. Total	Right	Thru	Left	Peds	App. Total	Right	Thru	Left	Peds	App. Total	Int. Total
Peak Hour Analysis From 04:00 PM to 05:45 PM - Peak 1 of 1																					
Peak Hour for Entire Intersection Begins at 05:00 PM																					
05:00 PM	13	46	39	3	101	40	85	68	0	193	46	84	33	3	166	20	171	21	0	212	672
05:15 PM	12	72	49	2	135	61	102	61	0	224	35	106	34	1	176	30	181	31	0	242	777
05:30 PM	14	74	44	0	132	74	93	56	0	223	55	104	50	0	209	34	148	18	0	200	764
05:45 PM	9	81	44	0	134	65	111	81	1	268	54	110	46	0	210	36	156	31	0	223	835
Total Volume	48	273	176	5	502	240	391	276	1	908	190	404	163	4	761	120	656	101	0	877	3048
% App. Total	9.6	54.4	35.1	1		26.4	43.1	30.4	0.1		25	53.1	21.4	0.5		13.7	74.8	11.5	0		
PHF	.857	.843	.898	.417	.930	.811	.881	.758	.250	.847	.864	.918	.815	.333	.906	.833	.906	.815	.000	.906	.913

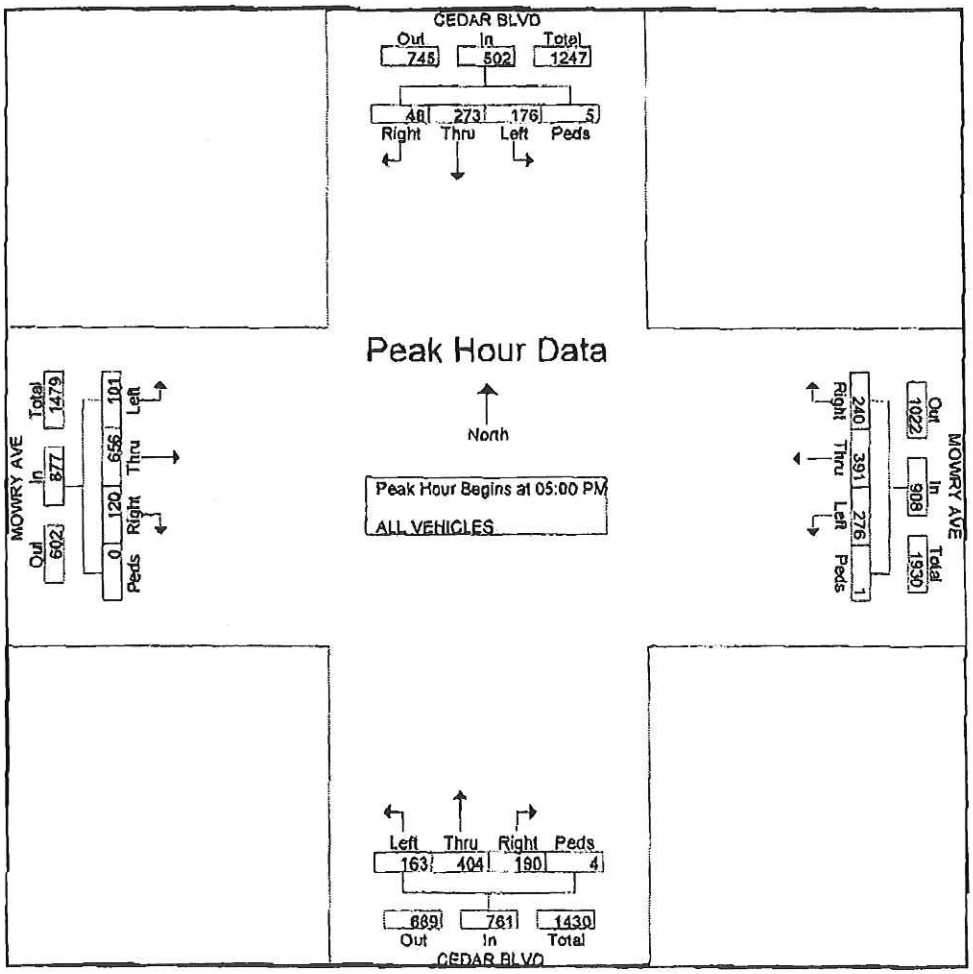

All Traffic Data Services
2187 Kingsbury Cir
Santa Clara, CA, 95054
www.Alltrafficdata.net

#6

File Name : ~~#12~~ ALPENROSE&MOWERYAM
Site Code : 12
Start Date : 5/14/2014
Page No : 2

	ALPENROSE CT Southbound					MOWERY AVE Westbound					ALPENROSE CT Northbound					MOWERY AVE Eastbound					
Start Time	Right	Thru	Left	Peds	App. Total	Right	Thru	Left	Peds	App. Total	Right	Thru	Left	Peds	App. Total	Right	Thru	Left	Peds	App. Total	Int. Total
Peak Hour Analysis From 07:00 AM to 08:45 AM - Peak 1 of 1																					
Peak Hour for Entire Intersection Begins at 07:45 AM																					
07:45 AM	2	4	9	2	17	2	198	85	1	286	8	0	2	4	14	9	122	4	2	137	454
08:00 AM	1	0	8	0	9	1	195	110	0	306	21	1	3	2	27	3	145	6	0	154	496
08:15 AM	7	2	6	0	15	4	200	111	0	316	10	0	6	1	17	10	150	6	4	170	517
08:30 AM	5	4	9	0	18	1	211	102	0	314	18	4	7	0	29	8	111	4	0	123	484
Total Volume	15	10	32	2	59	8	804	408	1	1221	57	5	18	7	87	30	528	20	6	584	1951
% App. Total	25.4	16.9	54.2	3.4		0.7	65.8	33.4	0.1		65.5	5.7	20.7	8		5.1	90.4	3.4	1		
PHF	.536	.625	.889	.250	.819	.500	.953	.919	.250	.969	.679	.313	.643	.438	.750	.750	.880	.833	.375	.859	.943

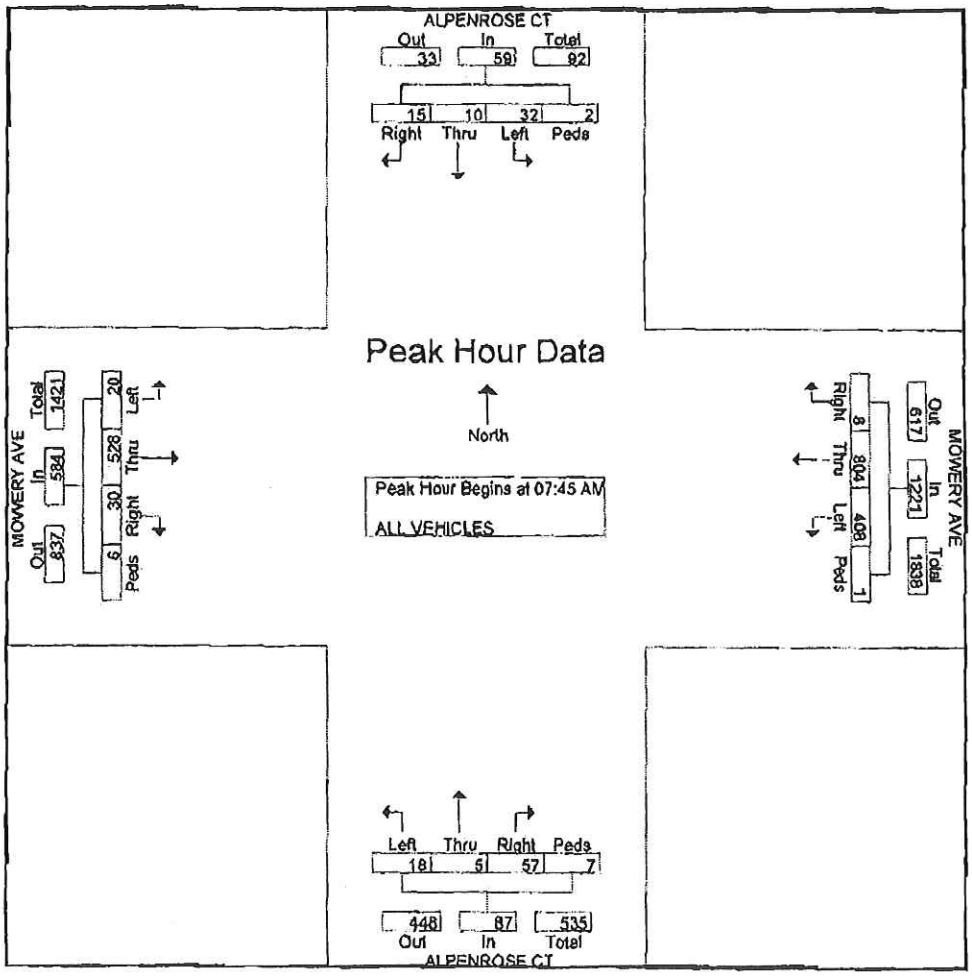

All Traffic Data Services
2187 Kingsbury Cir
Santa Clara, CA, 95054
www.Alltrafficdata.net

#6

File Name : ~~#12~~ ALPENROSE&MOWERYPM
Site Code : 12
Start Date : 5/14/2014
Page No : 2

	ALPENROSE CT Southbound					MOWERY AVE Westbound					ALPENROSE CT Northbound					MOWERY AVE Eastbound					
Start Time	Right	Thru	Left	Peds	App. Total	Right	Thru	Left	Peds	App. Total	Right	Thru	Left	Peds	App. Total	Right	Thru	Left	Peds	App. Total	Int. Total
Peak Hour Analysis From 04:00 PM to 05:45 PM - Peak 1 of 1																					
Peak Hour for Entire Intersection Begins at 04:30 PM																					
04:30 PM	7	5	7	0	19	3	164	99	2	268	61	3	7	1	72	8	291	9	0	308	667
04:45 PM	4	1	11	5	21	0	166	117	4	287	61	5	14	0	80	15	305	13	0	333	721
05:00 PM	3	6	6	1	16	2	198	118	0	318	65	8	8	0	81	14	203	14	4	235	650
05:15 PM	13	2	8	2	25	4	215	87	0	306	60	5	13	0	78	22	224	13	0	259	668
Total Volume	27	14	32	8	81	9	743	421	6	1179	247	21	42	1	311	59	1023	49	4	1135	2706
% App. Total	33.3	17.3	39.5	9.9		0.8	63	35.7	0.5		79.4	6.8	13.5	0.3		5.2	90.1	4.3	0.4		
PHF	.519	.583	.727	.400	.810	.563	.864	.892	.375	.927	.950	.656	.750	.250	.960	.670	.839	.875	.250	.852	.938

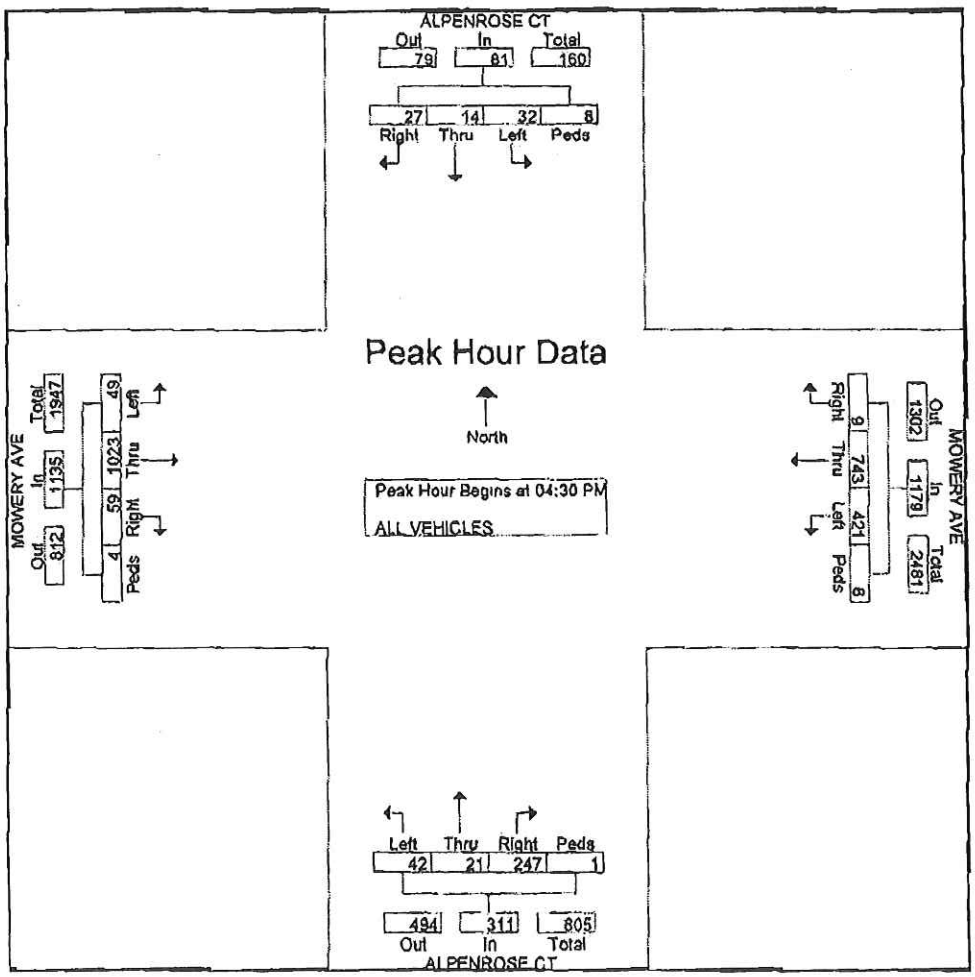

All Traffic Data Services
2187 Kingsbury Cir
Santa Clara, CA, 95054
www.Alltrafficdata.net

#7

File Name : ~~#2~~ I880SBRAMPS&MOWRYAM
Site Code : 2
Start Date : 5/13/2014
Page No : 2

	I-880 SB RAMPS Southbound					MOWRY AVE Westbound					I-880 SB RAMPS Northbound					MOWRY AVE Eastbound					
Start Time	Right	Thru	Left	Peds	App. Total	Right	Thru	Left	Peds	App. Total	Right	Thru	Left	Peds	App. Total	Right	Thru	Left	Peds	App. Total	Int. Total
Peak Hour Analysis From 07:00 AM to 08:45 AM - Peak 1 of 1																					
Peak Hour for Entire Intersection Begins at 07:45 AM																					
07:45 AM	42	0	105	0	147	0	268	0	0	268	0	0	0	0	0	93	141	0	0	234	649
08:00 AM	44	0	82	0	126	0	231	0	0	231	0	0	0	0	0	88	121	0	0	209	566
08:15 AM	42	0	99	1	142	0	288	0	0	288	0	0	0	0	0	92	137	0	0	229	659
08:30 AM	63	0	94	0	157	0	284	0	0	284	0	0	0	0	0	85	112	0	0	197	638
Total Volume	191	0	380	1	572	0	1071	0	0	1071	0	0	0	0	0	358	511	0	0	869	2512
% App. Total	33.4	0	66.4	0.2		0	100	0	0		0	0	0	0		41.2	58.8	0	0		
PHF	.758	.000	.905	.250	.911	.000	.930	.000	.000	.930	.000	.000	.000	.000	.000	.962	.906	.000	.000	.928	.953

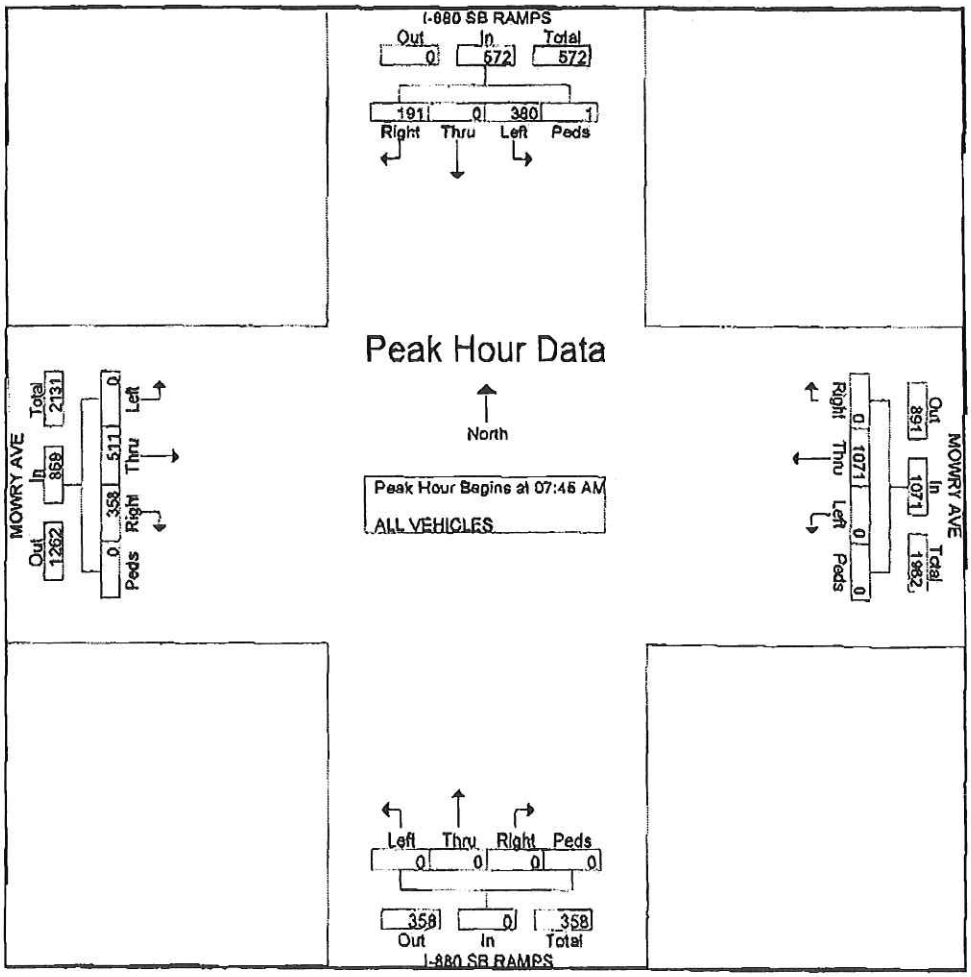

All Traffic Data Services
2187 Kingsbury Cir
Santa Clara, CA, 95054
www.Alltrafficdata.net

File Name : ~~#2~~ #7 I880SBRAMPS&MOWRYPM
Site Code : 2
Start Date : 5/13/2014
Page No : 2

	I-880 SB RAMPS Southbound					MOWRY AVE Westbound					I-880 SB RAMPS Northbound					MOWRY AVE Eastbound					
Start Time	Right	Thru	Left	Peds	App. Total	Right	Thru	Left	Peds	App. Total	Right	Thru	Left	Peds	App. Total	Right	Thru	Left	Peds	App. Total	Int. Total
Peak Hour Analysis From 04:00 PM to 05:45 PM - Peak 1 of 1																					
Peak Hour for Entire Intersection Begins at 05:00 PM																					
05:00 PM	70	0	213	2	285	0	199	0	0	199	0	0	0	0	0	70	275	0	0	345	829
05:15 PM	92	0	225	0	317	0	243	0	0	243	0	0	0	0	0	78	288	0	0	366	926
05:30 PM	93	0	225	2	320	0	204	0	0	204	0	0	0	0	0	71	337	0	0	408	932
05:45 PM	118	0	224	3	345	0	248	0	0	248	0	0	0	0	0	67	342	0	0	409	1002
Total Volume	373	0	887	7	1267	0	894	0	0	894	0	0	0	0	0	286	1242	0	0	1528	3689
% App. Total	29.4	0	70	0.6		0	100	0	0		0	0	0	0		18.7	81.3	0	0		
PHF	.790	.000	.986	.583	.918	.000	.901	.000	.000	.901	.000	.000	.000	.000	.000	.917	.908	.000	.000	.934	.920

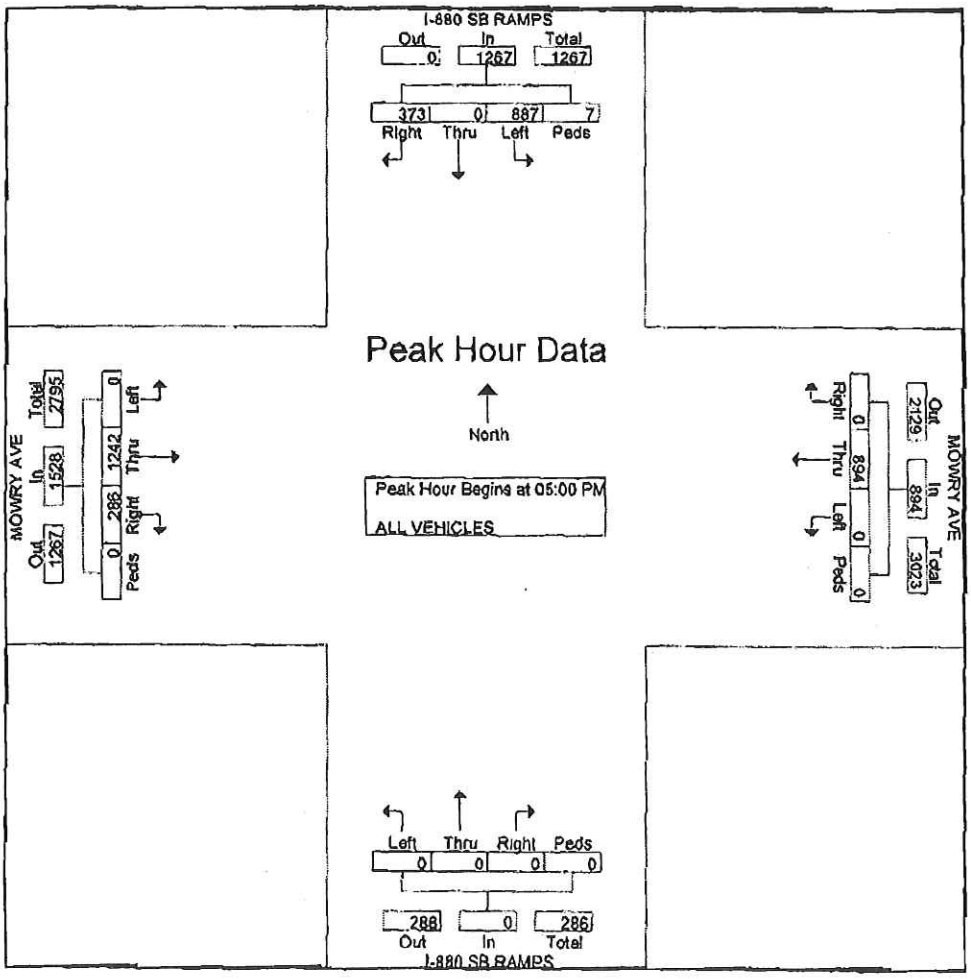

All Traffic Data Services
2187 Kingsbury Cir
Santa Clara, CA, 95054
www.Alltrafficdata.net

#8

File Name : ~~#2~~ I880NBRAMPS&MOWRYAM
Site Code : 3
Start Date : 5/13/2014
Page No : 2

	I-880 NB RAMPS Southbound					MOWRY AVE Westbound					I-880 NB RAMPS Northbound					MOWRY AVE Eastbound					
Start Time	Right	Thru	Left	Peds	App. Total	Right	Thru	Left	Peds	App. Total	Right	Thru	Left	Peds	App. Total	Right	Thru	Left	Peds	App. Total	Int. Total
Peak Hour Analysis From 07.00 AM to 08:45 AM - Peak 1 of 1																					
Peak Hour for Entire Intersection Begins at 07:45 AM																					
07:45 AM	0	0	0	0	0	0	320	0	0	320	103	0	56	0	159	48	204	0	0	252	731
08:00 AM	0	0	0	0	0	0	342	0	0	342	123	0	59	0	182	39	162	0	0	201	725
08:15 AM	0	0	0	0	0	0	387	0	0	387	112	0	70	2	184	39	198	0	0	237	808
08:30 AM	0	0	0	0	0	0	400	0	0	400	114	0	54	0	168	34	172	0	0	206	774
Total Volume	0	0	0	0	0	0	1449	0	0	1449	452	0	239	2	693	160	736	0	0	896	3038
% App Total	0	0	0	0		0	100	0	0		65.2	0	34.5	0.3		17.9	82.1	0	0		
PHF	.000	.000	.000	.000	.000	.000	.906	.000	.000	.906	.919	.000	.854	.250	.942	.833	.902	.000	.000	.889	.940

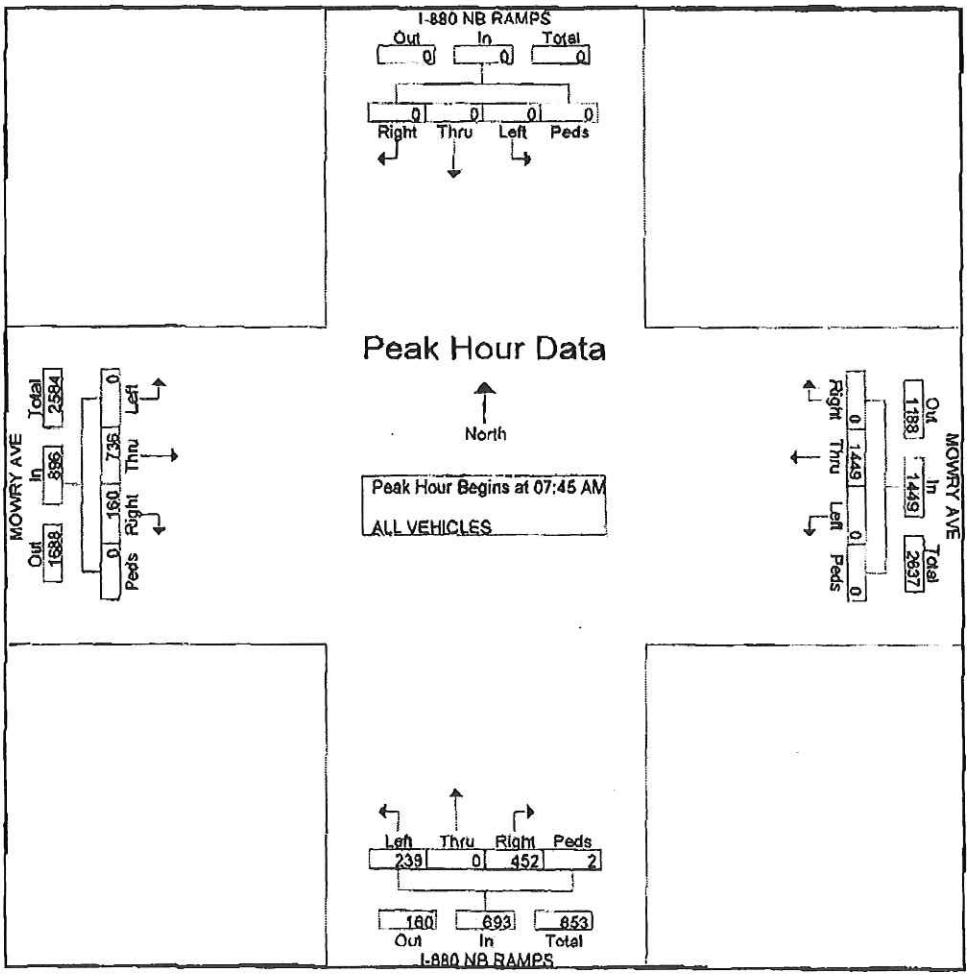

All Traffic Data Services
2187 Kingsbury Cir
Santa Clara, CA, 95054
www.Alltrafficdata.net

#8

File Name : ~~#3~~ I880NBRAMPS&MOWRYPM
Site Code : 3
Start Date : 5/13/2014
Page No : 2

	I-880 NB RAMPS Southbound					MOWRY AVE Westbound					I-880 NB RAMPS Northbound					MOWRY AVE Eastbound					
Start Time	Right	Thru	Left	Peds	App. Total	Right	Thru	Left	Peds	App. Total	Right	Thru	Left	Peds	App. Total	Right	Thru	Left	Peds	App. Total	Int. Total
Peak Hour Analysis From 04:00 PM to 05:45 PM - Peak 1 of 1																					
Peak Hour for Entire Intersection Begins at 05:00 PM																					
05:00 PM	0	0	0	0	0	0	272	0	0	272	245	0	42	4	291	94	422	0	0	516	1079
05:15 PM	0	0	0	0	0	0	308	0	0	308	230	0	54	0	284	92	437	0	0	529	1121
05:30 PM	0	0	0	0	0	0	269	0	0	269	268	0	56	0	314	116	442	0	0	558	1141
05:45 PM	0	0	0	0	0	0	315	0	0	315	237	0	58	0	295	107	481	0	0	588	1198
Total Volume	0	0	0	0	0	0	1184	0	0	1164	970	0	210	4	1184	409	1782	0	0	2191	4539
% App. Total	0	0	0	0		0	100	0	0		81.9	0	17.7	0.3		18.7	81.3	0	0		
PHF	.000	.000	.000	.000	.000	.000	.924	.000	.000	.924	.940	.000	.905	.250	.943	.881	.926	.000	.000	.932	.947

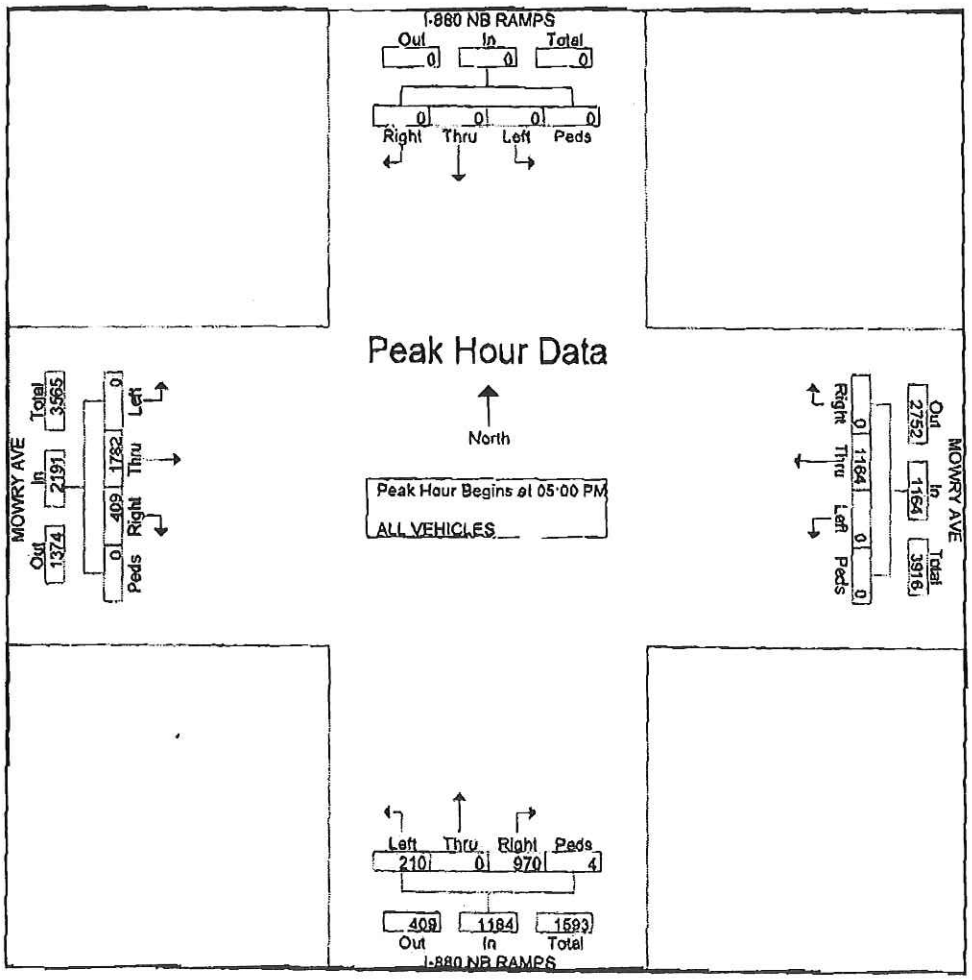

All Traffic Data Services
2187 Kingsbury Cir
Santa Clara, CA, 95054
www.Alltrafficdata.net

#9

File Name : ~~##~~ FARWELL&MOWRYAM
Site Code : 00000000
Start Date : 4/2/2014
Page No : 2

	FARWELL DR Southbound					MOWRY AVE Westbound					FARWELL DR Northbound					MOWRY AVE Eastbound					
Start Time	Right	Thru	Left	Peds	App. Total	Right	Thru	Left	Peds	App. Total	Right	Thru	Left	Peds	App. Total	Right	Thru	Left	Peds	App. Total	Int. Total
Peak Hour Analysis From 07:00 AM to 08:45 AM - Peak 1 of 1																					
Peak Hour for Entire Intersection Begins at 07:45 AM																					
07:45 AM	57	17	32	1	107	9	428	20	4	461	20	17	40	0	77	25	215	16	0	256	901
08:00 AM	62	16	19	5	102	24	400	20	5	449	19	18	44	0	81	31	219	14	0	264	896
08:15 AM	68	24	28	3	123	28	421	31	5	485	8	27	71	1	107	49	200	18	0	267	982
08:30 AM	75	21	36	0	132	21	404	26	1	452	21	16	73	0	110	27	212	24	0	263	957
Total Volume	262	78	115	9	464	82	1653	97	15	1847	68	78	228	1	375	132	846	72	0	1050	3736
% App. Total	56.5	16.8	24.8	1.9		4.4	89.5	5.3	0.8		18.1	20.8	60.8	0.3		12.6	80.6	6.9	0		
PHF	.873	.813	.799	.450	.879	.732	.966	.782	.750	.952	.810	.722	.781	.250	.852	.673	.966	.750	.000	.983	.951

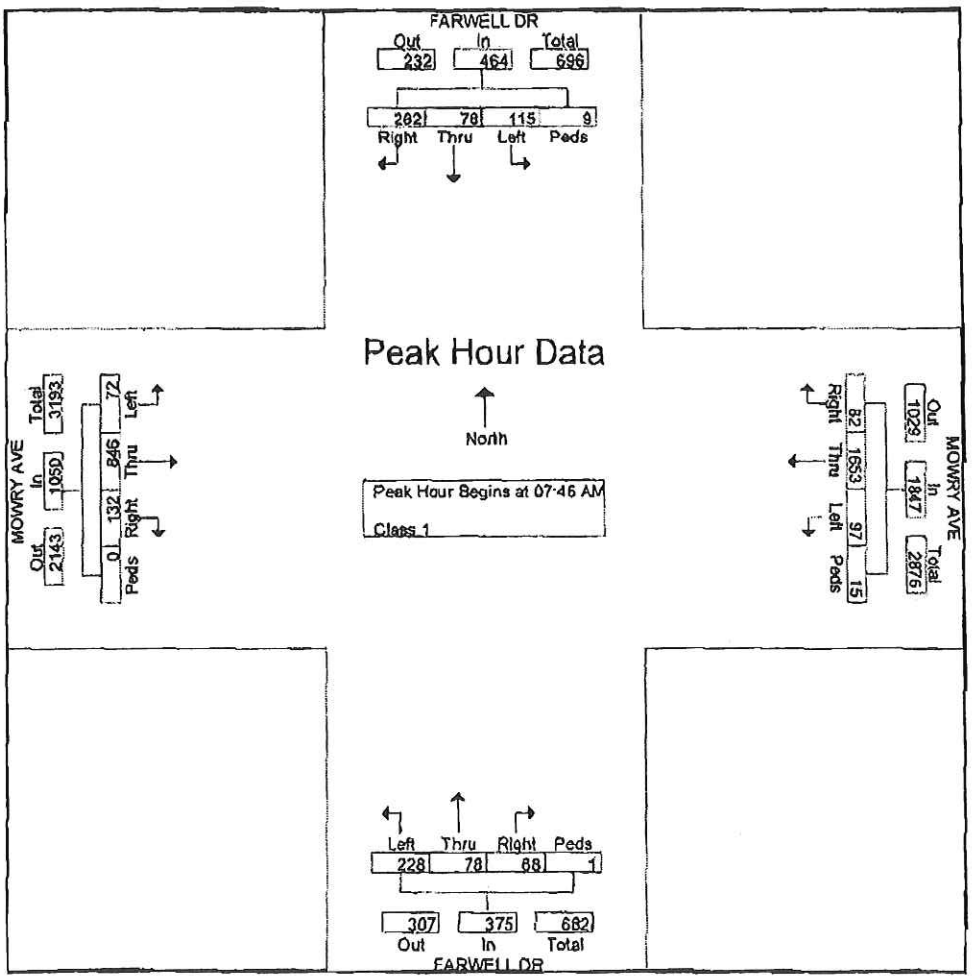

All Traffic Data Services
2187 Kingsbury Cir
Santa Clara, CA, 95054
www.Alltrafficdata.net

#9

File Name : ~~#~~ FARWELL&MOWRYPM
Site Code : 00000000
Start Date : 4/2/2014
Page No : 2

	FARWELL DR Southbound					MOWRY AVE Westbound					FARWELL DR Northbound					MOWRY AVE Eastbound					
Start Time	Right	Thru	Left	Peds	App. Total	Right	Thru	Left	Peds	App. Total	Right	Thru	Left	Peds	App. Total	Right	Thru	Left	Peds	App. Total	Int. Total
Peak Hour Analysis From 04:00 PM to 05:45 PM - Peak 1 of 1																					
Peak Hour for Entire Intersection Begins at 04:45 PM																					
04:45 PM	40	22	22	0	84	23	333	45	1	402	46	36	70	1	153	84	493	68	0	646	1284
05:00 PM	26	18	22	0	68	16	310	29	4	359	42	30	76	6	164	84	450	45	0	579	1160
05:15 PM	31	24	23	1	79	20	333	60	6	419	42	21	67	1	131	87	409	51	0	547	1176
05:30 PM	25	21	31	1	78	16	307	40	0	363	64	15	82	0	151	87	435	35	0	557	1149
Total Volume	124	85	98	2	309	75	1283	174	11	1543	184	102	295	8	589	342	1787	199	0	2328	4769
% App. Total	40.1	27.5	31.7	0.6		4.9	83.1	11.3	0.7		31.2	17.3	50.1	1.4		14.7	76.8	8.5	0		
PHF	.775	.885	.790	.500	.920	.815	.963	.725	.458	.921	.852	.708	.899	.333	.956	.983	.906	.732	.000	.902	.929

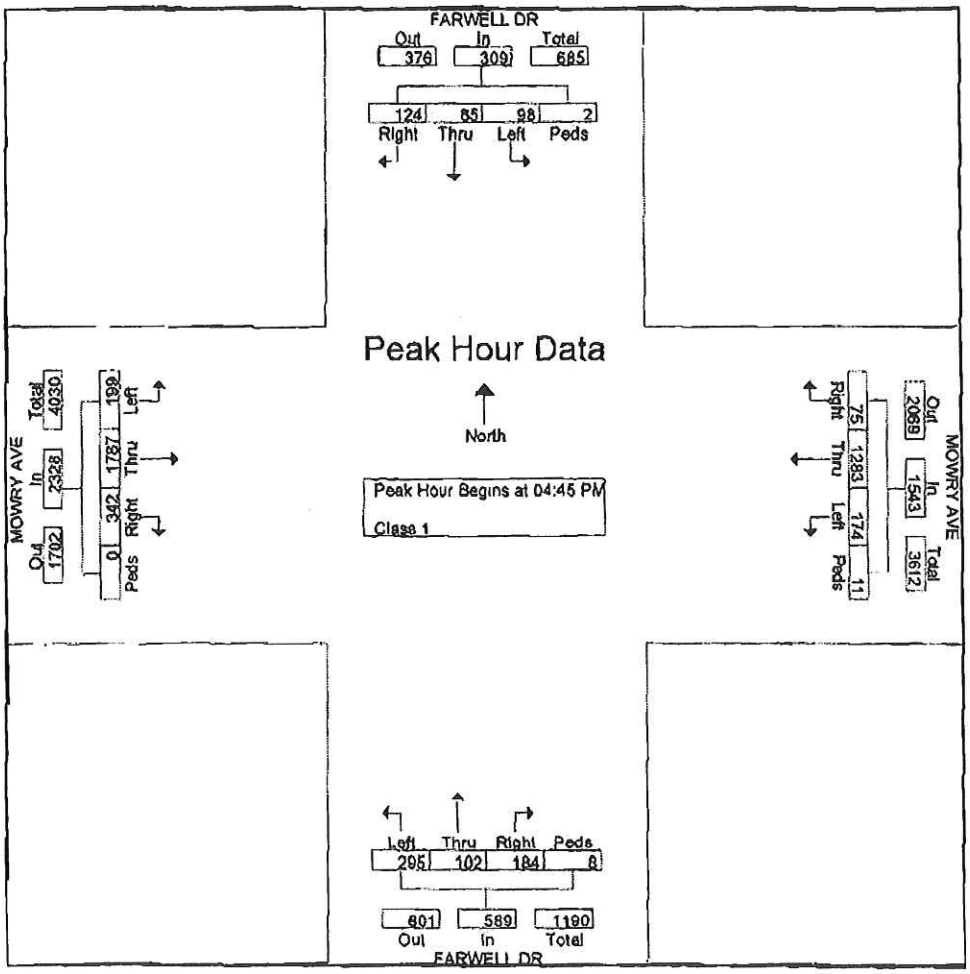

All Traffic Data Services
2187 Kingsbury Cir
Santa Clara, CA, 95054
www.Alltrafficdata.net

#10

File Name : ~~#11~~ CEDAR&STEVENSONAM
Site Code : 11
Start Date : 5/14/2014
Page No : 2

	CEDAR BLVD Southbound					STEVENSON BLVD Westbound					CEDAR BLVD Northbound					STEVENSON BLVD Eastbound					
Start Time	Right	Thru	Left	Peds	App. Total	Right	Thru	Left	Peds	App. Total	Right	Thru	Left	Peds	App. Total	Right	Thru	Left	Peds	App. Total	Int. Total
Peak Hour Analysis From 07:00 AM to 08:45 AM - Peak 1 of 1																					
Peak Hour for Entire Intersection Begins at 08:00 AM																					
08:00 AM	38	7	93	4	142	23	247	22	0	292	1	0	0	0	1	2	112	12	4	130	565
08:15 AM	74	5	101	0	180	27	222	22	0	271	2	0	0	1	3	2	108	16	1	127	581
08:30 AM	63	3	100	0	166	43	237	12	0	292	0	1	1	0	2	1	108	10	0	119	579
08:45 AM	68	3	101	1	173	59	242	17	0	318	1	0	0	1	2	2	81	13	0	96	589
Total Volume	243	18	395	5	661	152	948	73	0	1173	4	1	1	2	8	7	409	51	5	472	2314
% App. Total	36.8	2.7	59.8	0.8		13	80.8	6.2	0		50	12.5	12.5	25		1.5	86.7	10.8	1.1		
PHF	.821	.643	.978	.313	.918	.644	.960	.830	.000	.922	.500	.250	.250	.500	.667	.875	.913	.797	.313	.908	.982

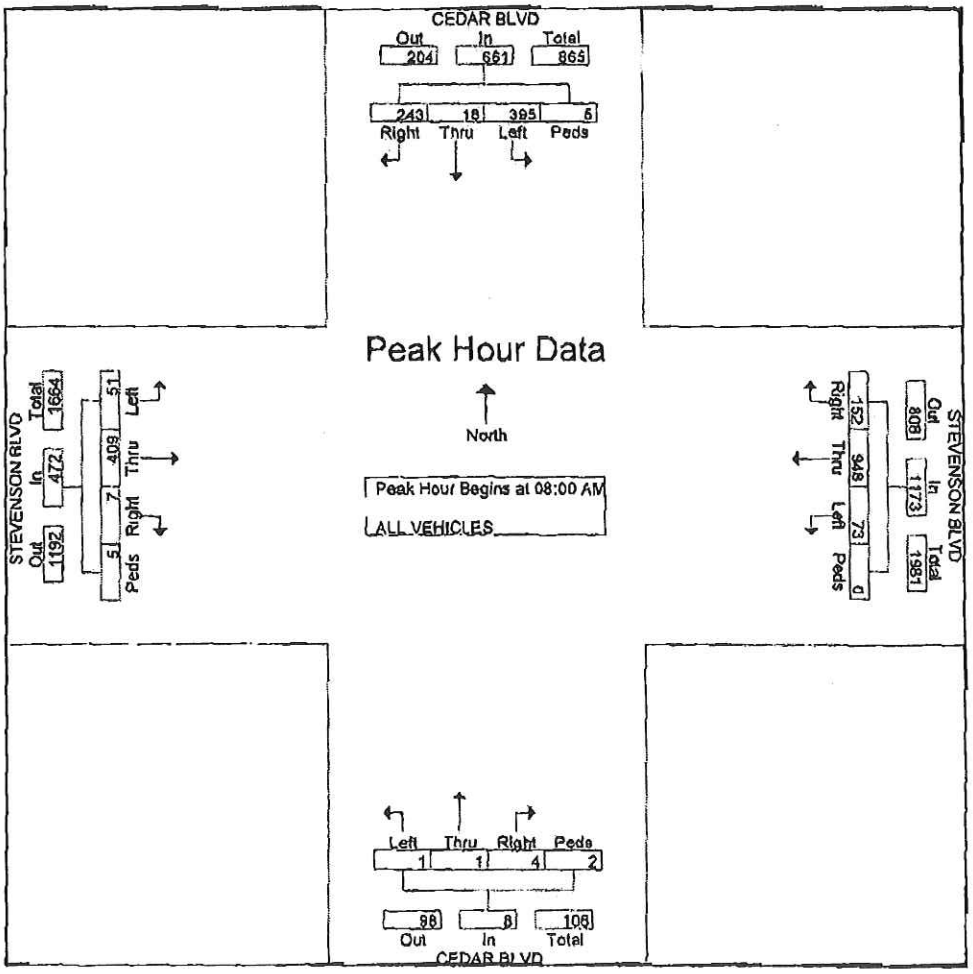

All Traffic Data Services
2187 Kingsbury Cir
Santa Clara, CA, 95054
www.Alltrafficdata.net

#10

File Name : ~~#11~~ CEDAR&STEVENSONPM
Site Code : 11
Start Date : 5/14/2014
Page No : 2

	CEDAR BLVD Southbound					STEVENSON BLVD Westbound					CEDAR BLVD Northbound					STEVENSON BLVD Eastbound					
Start Time	Right	Thru	Left	Peds	App. Total	Right	Thru	Left	Peds	App. Total	Right	Thru	Left	Peds	App. Total	Right	Thru	Left	Peds	App. Total	Int. Total
Peak Hour Analysis From 04:00 PM to 05:45 PM - Peak 1 of 1																					
Peak Hour for Entire Intersection Begins at 04:30 PM																					
04:30 PM	15	0	55	4	74	63	111	20	0	194	14	0	2	0	16	0	266	47	2	306	589
04:45 PM	18	1	52	4	75	64	86	19	0	169	12	1	1	0	14	2	224	44	1	271	529
05:00 PM	12	0	62	1	75	59	95	21	0	175	20	6	2	1	29	0	224	43	1	268	547
05:15 PM	22	1	49	0	72	77	108	25	0	210	15	3	0	0	18	0	198	46	1	245	545
Total Volume	67	2	218	9	296	263	400	85	0	748	61	10	5	1	77	2	902	180	5	1089	2210
% App Total	22.6	0.7	73.6	3		35.2	53.5	11.4	0		79.2	13	6.5	1.3		0.2	82.8	16.5	0.5		
PHF	.761	.500	.879	.563	.987	.854	.901	.850	.000	.890	.763	.417	.625	.250	.664	.250	.881	.957	.625	.893	.938

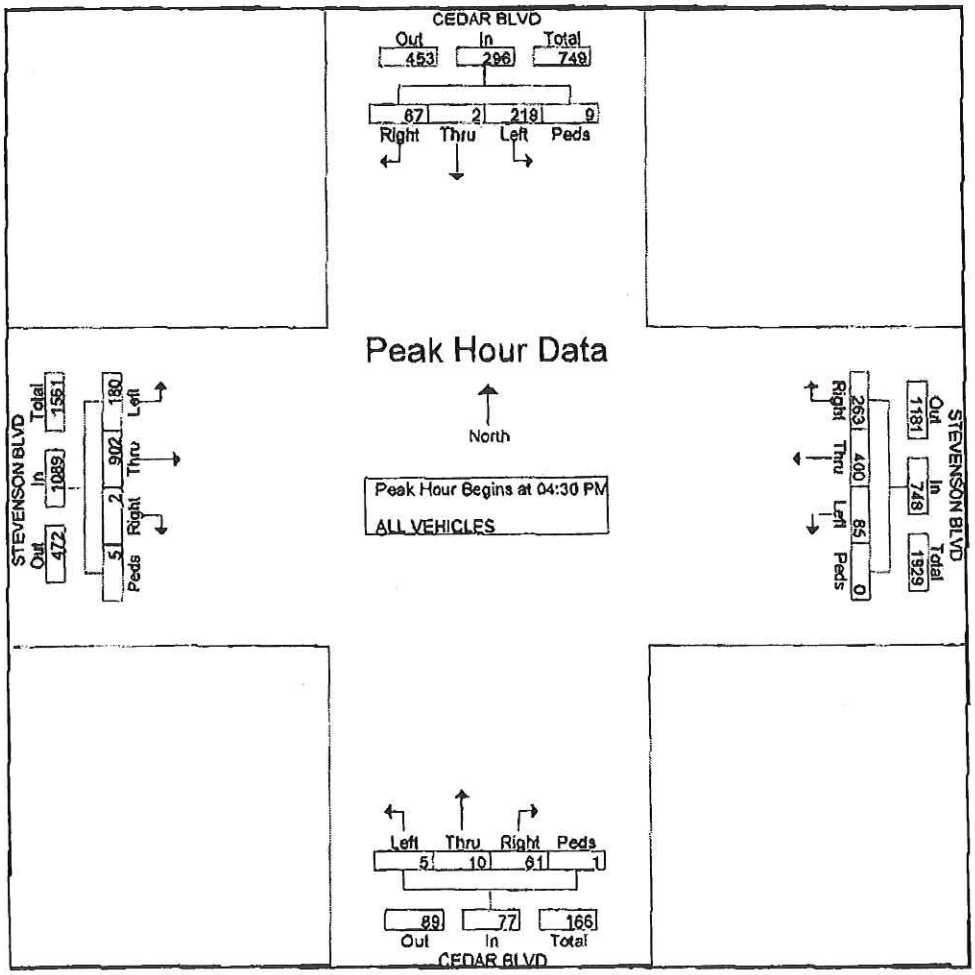

All Traffic Data Services
2187 Kingsbury Cir
Santa Clara, CA, 95054
www.Alltrafficdata.net

#11

File Name : #~~14~~ ALBRAE&STEVENSONAM
Site Code : 14
Start Date : 5/14/2014
Page No : 2

	BALENTINE DR Southbound					STEVENSON BLVD Westbound					ALBRAE ST Northbound					STEVENSON BLVD Eastbound					
Start Time	Right	Thru	Left	Peds	App. Total	Right	Thru	Left	Peds	App. Total	Right	Thru	Left	Peds	App. Total	Right	Thru	Left	Peds	App. Total	Int. Total
Peak Hour Analysis From 07:00 AM to 08:45 AM - Peak 1 of 1																					
Peak Hour for Entire Intersection Begins at 08:00 AM																					
08:00 AM	6	16	37	0	59	51	264	115	0	430	34	2	4	0	40	53	185	1	0	239	768
08:15 AM	7	13	33	1	54	44	240	113	0	397	20	3	12	0	35	66	177	2	0	245	731
08:30 AM	9	27	38	0	74	87	271	132	0	490	38	3	9	0	50	67	153	4	1	225	839
08:45 AM	9	20	88	0	97	86	243	118	0	447	32	3	10	0	45	68	151	4	0	223	812
Total Volume	31	76	176	1	284	268	1018	478	0	1764	124	11	35	0	170	254	666	11	1	932	3150
% App. Total	10.9	26.8	62	0.4		15.2	57.7	27.1	0		72.9	6.5	20.6	0		27.3	71.5	1.2	0.1		
PHF	.861	.704	.647	.250	.732	.770	.939	.905	.000	.900	.816	.917	.729	.000	.850	.934	.900	.688	.250	.951	.939

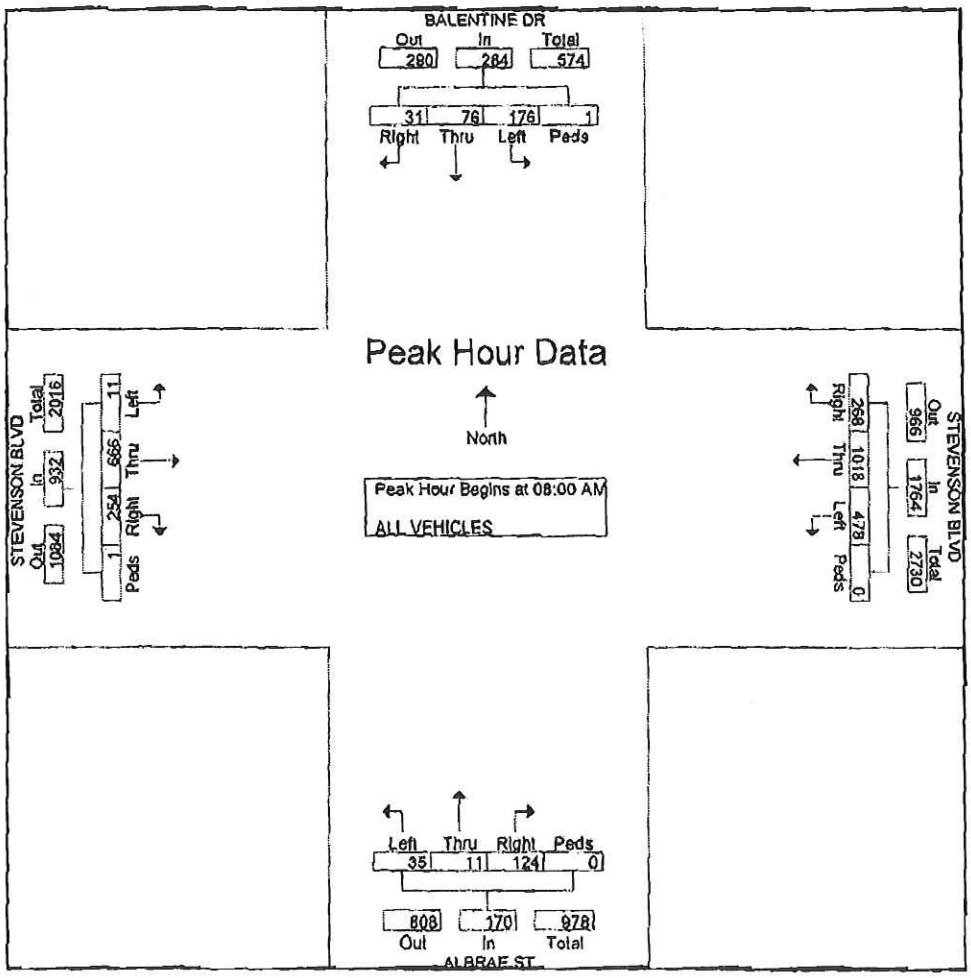

All Traffic Data Services
2187 Kingsbury Cir
Santa Clara, CA, 95054
www.Alltrafficdata.net

#11

File Name : ~~#14~~ ALBRAE&STEVENSONPM
Site Code : 14
Start Date : 5/14/2014
Page No : 2

	BALENTINE DR Southbound					STEVENSON BLVD Westbound					ALBRAE ST Northbound					STEVENSON BLVD Eastbound					
Start Time	Right	Thru	Left	Peds	App. Total	Right	Thru	Left	Peds	App. Total	Right	Thru	Left	Peds	App. Total	Right	Thru	Left	Peds	App. Total	Int. Total
Peak Hour Analysis From 04:00 PM to 05:45 PM - Peak 1 of 1																					
Peak Hour for Entire Intersection Begins at 05:00 PM																					
05:00 PM	9	18	81	1	109	80	135	72	0	287	166	11	50	0	227	19	283	11	1	314	937
05:15 PM	9	11	108	1	129	88	129	52	0	269	150	33	49	0	232	27	233	14	4	278	908
05:30 PM	8	13	90	3	114	83	130	41	0	254	130	29	45	0	204	35	229	7	2	273	845
05:45 PM	5	11	100	1	117	93	151	78	0	322	123	19	36	0	178	26	254	3	1	284	901
Total Volume	31	53	379	6	469	344	545	243	0	1132	569	92	180	0	841	107	999	35	8	1149	3591
% App Total	6.6	11.3	80.8	1.3		30.4	48.1	21.5	0		67.7	10.9	21.4	0		9.3	86.9	3	0.7		
PHF	.861	.736	.877	.500	.909	.925	.902	.779	.000	.879	.857	.697	.900	.000	.908	.764	.883	.625	.500	.815	.958

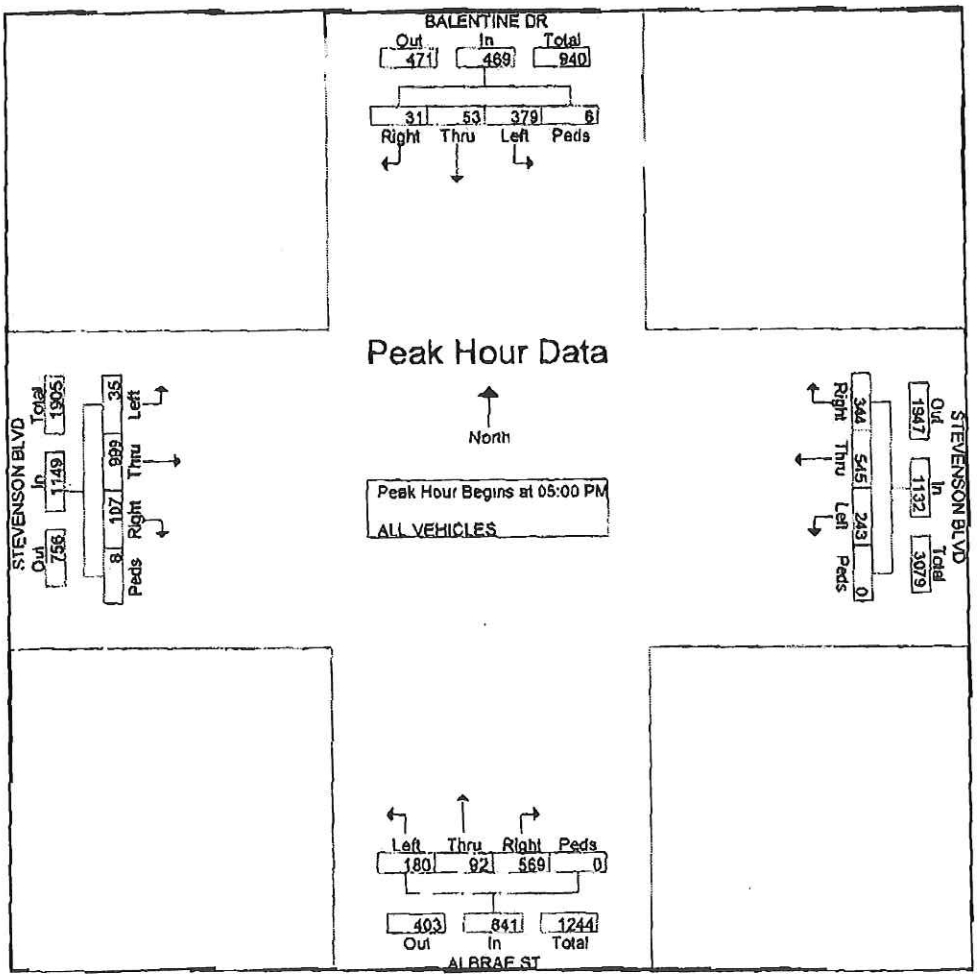

All Traffic Data Services
2187 Kingsbury Cir
Santa Clara, CA, 95054
www.Alltrafficdata.net

#12

File Name : ~~#1~~ CEDAR&MOORESAM
Site Code : 1
Start Date : 5/13/2014
Page No : 2

	CEDAR BLVD Southbound					MOORES AVE Westbound					CEDAR BLVD Northbound					MOORES AVE Eastbound					
Start Time	Right	Thru	Left	Peds	App. Total	Right	Thru	Left	Peds	App. Total	Right	Thru	Left	Peds	App. Total	Right	Thru	Left	Peds	App. Total	Int. Total
Peak Hour Analysis From 07:00 AM to 08:45 AM - Peak 1 of 1																					
Peak Hour for Entire Intersection Begins at 07:15 AM																					
07:15 AM	4	261	1	0	266	0	0	0	0	0	2	73	0	0	75	4	0	4	1	9	350
07:30 AM	4	279	3	0	286	0	0	0	0	0	2	135	0	0	137	3	0	6	2	11	434
07:45 AM	5	182	0	0	187	1	0	0	0	1	0	118	0	0	118	2	0	13	0	15	321
08:00 AM	10	216	0	0	226	0	0	0	0	0	1	56	0	0	57	1	0	8	0	9	292
Total Volume	23	938	4	0	965	1	0	0	0	1	5	382	0	0	387	10	0	31	3	44	1397
% App. Total	2.4	97.2	0.4	0		100	0	0	0		1.3	98.7	0	0		22.7	0	70.5	6.8		
PHF	.575	.841	.333	.000	.844	.250	.000	.000	.000	.250	.625	.707	.000	.000	.706	.625	.000	.596	.375	.733	.805

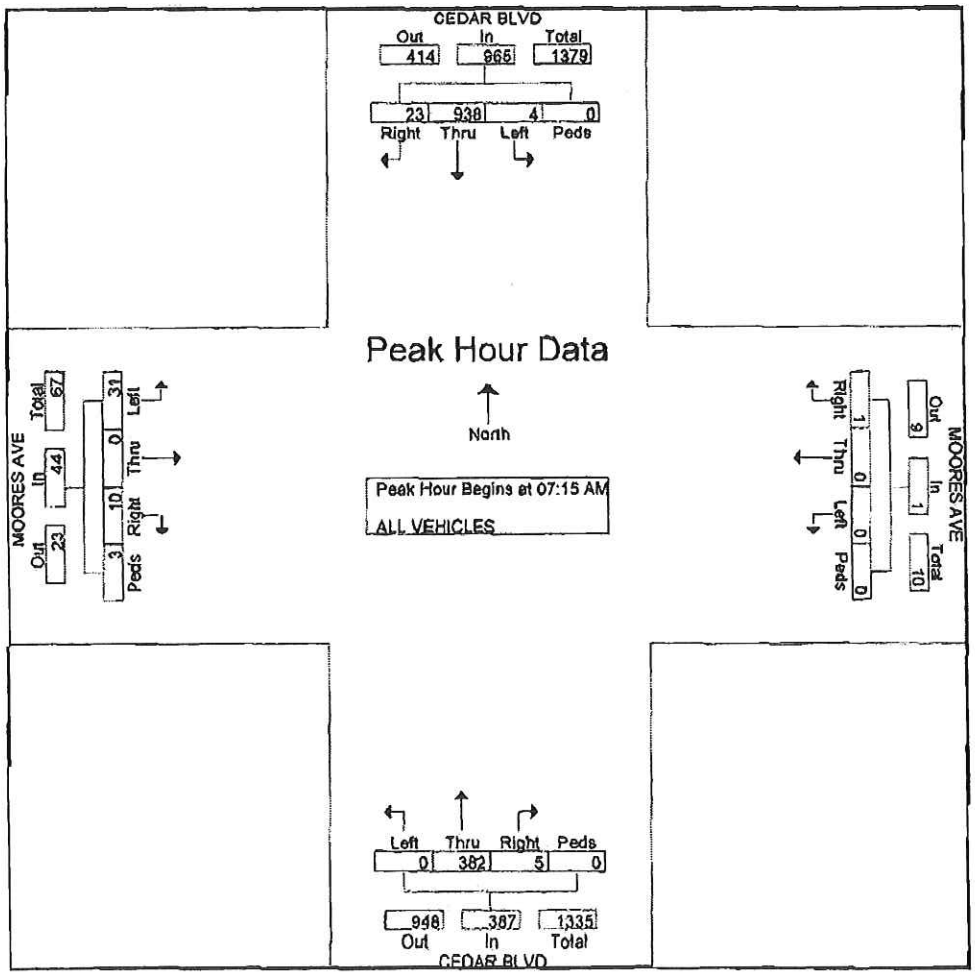

All Traffic Data Services
2187 Kingsbury Cir
Santa Clara, CA, 95054
www.Alltrafficdata.net

#12

File Name : ~~#1~~ CEDAR&MOORESPM
Site Code : 1
Start Date : 5/13/2014
Page No : 2

	CEDAR BLVD Southbound					MOORES AVE Westbound					CEDAR BLVD Northbound					MOORES AVE Eastbound					
Start Time	Right	Thru	Left	Peds	App. Total	Right	Thru	Left	Peds	App. Total	Right	Thru	Left	Peds	App. Total	Right	Thru	Left	Peds	App. Total	Int. Total
Peak Hour Analysis From 04:00 PM to 05:45 PM - Peak 1 of 1																					
Peak Hour for Entire Intersection Begins at 05:00 PM																					
05:00 PM	10	91	0	0	101	3	0	1	0	4	0	142	2	0	144	0	0	9	0	9	258
05:15 PM	2	97	0	0	99	1	0	0	0	1	0	147	0	0	147	1	0	7	0	8	255
05:30 PM	5	113	0	0	118	0	0	2	0	2	0	157	2	0	159	1	0	4	1	6	285
05:45 PM	3	92	0	0	95	0	0	0	0	0	0	120	1	0	121	3	0	8	1	12	228
Total Volume	20	393	0	0	413	4	0	3	0	7	0	566	5	0	571	5	0	28	2	35	1026
% App. Total	4.8	95.2	0	0		57.1	0	42.9	0		0	99.1	0.9	0		14.3	0	80	5.7		
PHF	.500	.869	.000	.000	.875	.333	.000	.375	.000	.438	.000	.901	.625	.000	.898	.417	.000	.778	.500	.729	.900

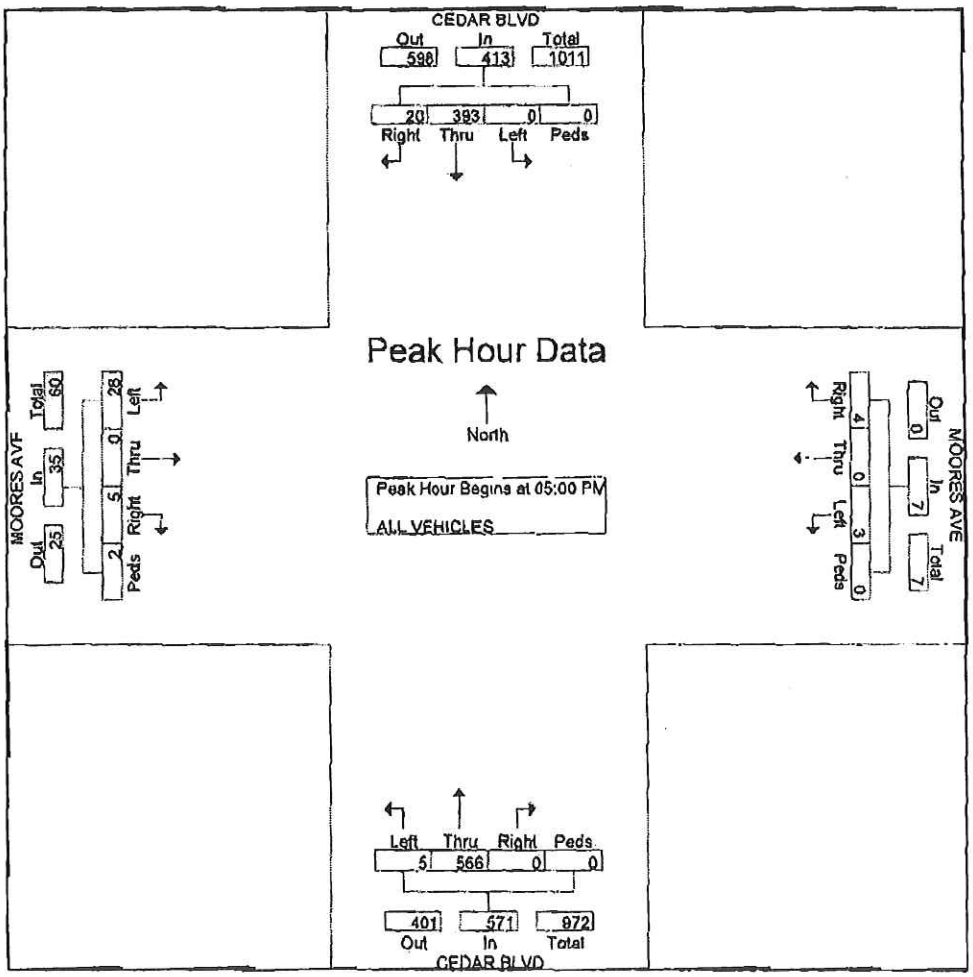

Appendix B
LOS Calculations

Mowry Ave Residential
Newark, CA
TIA

Level Of Service Computation Report
2000 HCM Operations (Future Volume Alternative)
Existing AM

Intersection #1: Cedar Blvd and Thornton Ave

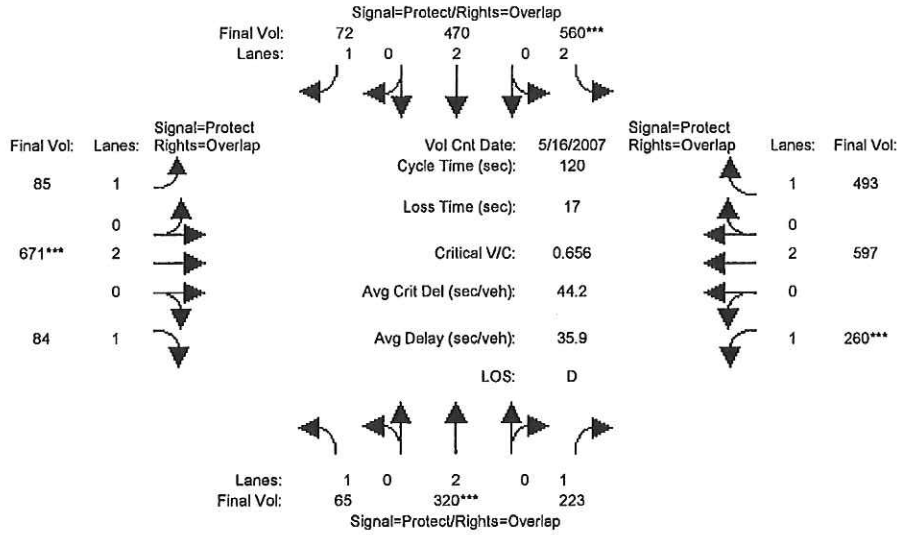

Street Name:	Cedar Boulevard						Thornton Avenue					
Approach:	North Bound			South Bound			East Bound			West Bound		
Movement:	L -	T -	R	L -	T -	R	L -	T -	R	L -	T -	R
Min. Green:	7	10	10	7	10	10	7	10	10	7	10	10
Y+R:	4.0	4.0	4.0	4.0	4.0	4.0	4.0	4.0	4.0	4.0	4.0	4.0
Volume Module: >> Count Date: 16 May 2007 <<												
Base Vol:	65	320	223	560	470	72	85	671	84	260	597	493
Growth Adj:	1.00	1.00	1.00	1.00	1.00	1.00	1.00	1.00	1.00	1.00	1.00	1.00
Initial Bse:	65	320	223	560	470	72	85	671	84	260	597	493
Added Vol:	0	0	0	0	0	0	0	0	0	0	0	0
PasserByVol:	0	0	0	0	0	0	0	0	0	0	0	0
Initial Fut:	65	320	223	560	470	72	85	671	84	260	597	493
User Adj:	1.00	1.00	1.00	1.00	1.00	1.00	1.00	1.00	1.00	1.00	1.00	1.00
PHF Adj:	1.00	1.00	1.00	1.00	1.00	1.00	1.00	1.00	1.00	1.00	1.00	1.00
PHF Volume:	65	320	223	560	470	72	85	671	84	260	597	493
Reduct Vol:	0	0	0	0	0	0	0	0	0	0	0	0
Reduced Vol:	65	320	223	560	470	72	85	671	84	260	597	493
PCE Adj:	1.00	1.00	1.00	1.00	1.00	1.00	1.00	1.00	1.00	1.00	1.00	1.00
MLF Adj:	1.00	1.00	1.00	1.00	1.00	1.00	1.00	1.00	1.00	1.00	1.00	1.00
FinalVolume:	65	320	223	560	470	72	85	671	84	260	597	493
Saturation Flow Module:												
Sat/Lane:	1900	1900	1900	1900	1900	1900	1900	1900	1900	1900	1900	1900
Adjustment:	1.00	0.95	1.00	0.97	0.95	1.00	1.00	0.95	1.00	1.00	0.95	1.00
Lanes:	1.00	2.00	1.00	2.00	2.00	1.00	1.00	2.00	1.00	1.00	2.00	1.00
Final Sat.:	1900	3610	1900	3686	3610	1900	1900	3610	1900	1900	3610	1900
Capacity Analysis Module:												
Vol/Sat:	0.03	0.09	0.12	0.15	0.13	0.04	0.04	0.19	0.04	0.14	0.17	0.26
Crit Moves:		****		****				****		****		
Green Time:	13.6	16.2	41.2	27.8	30.4	45.8	15.4	34.0	47.6	25.0	43.6	71.4
Volume/Cap:	0.30	0.66	0.34	0.66	0.51	0.10	0.35	0.66	0.11	0.66	0.45	0.44
Delay/Veh:	49.6	52.5	29.6	43.7	39.0	23.9	48.6	39.4	22.9	47.5	29.4	13.6
User DelAdj:	1.00	1.00	1.00	1.00	1.00	1.00	1.00	1.00	1.00	1.00	1.00	1.00
AdjDel/Veh:	49.6	52.5	29.6	43.7	39.0	23.9	48.6	39.4	22.9	47.5	29.4	13.6
LOS by Move:	D	D	C	D	D	C	D	D	C	D	C	B
HCM2kAvgQ:	2	6	6	10	8	2	3	12	2	9	8	10

Note: Queue reported is the number of cars per lane.

Copyright (c) 2008 Dowling Associates, Inc. Licensed to Hexagon Trans., San Jose

Mowry Ave Residential
Newark, CA
TIA

Level Of Service Computation Report
2000 HCM Operations (Future Volume Alternative)
Bkgrd AM

Intersection #1: Cedar Blvd and Thornton Ave

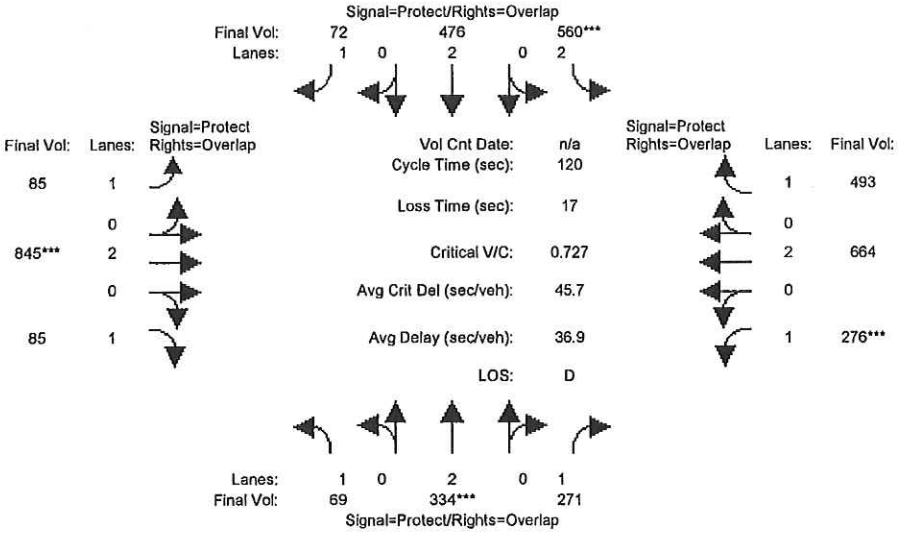

Street Name:	Cedar Boulevard						Thornton Avenue					
Approach:	North Bound			South Bound			East Bound			West Bound		
Movement:	L -	T -	R	L -	T -	R	L -	T -	R	L -	T -	R
Min. Green:	7	10	10	7	10	10	7	10	10	7	10	10
Y+R:	4.0	4.0	4.0	4.0	4.0	4.0	4.0	4.0	4.0	4.0	4.0	4.0
Volume Module:												
Base Vol:	69	334	271	560	476	72	85	845	85	276	664	493
Growth Adj:	1.00	1.00	1.00	1.00	1.00	1.00	1.00	1.00	1.00	1.00	1.00	1.00
Initial Bse:	69	334	271	560	476	72	85	845	85	276	664	493
Added Vol:	0	0	0	0	0	0	0	0	0	0	0	0
PasserByVol:	0	0	0	0	0	0	0	0	0	0	0	0
Initial Fut:	69	334	271	560	476	72	85	845	85	276	664	493
User Adj:	1.00	1.00	1.00	1.00	1.00	1.00	1.00	1.00	1.00	1.00	1.00	1.00
PHF Adj:	1.00	1.00	1.00	1.00	1.00	1.00	1.00	1.00	1.00	1.00	1.00	1.00
PHF Volume:	69	334	271	560	476	72	85	845	85	276	664	493
Reduct Vol:	0	0	0	0	0	0	0	0	0	0	0	0
Reduced Vol:	69	334	271	560	476	72	85	845	85	276	664	493
PCE Adj:	1.00	1.00	1.00	1.00	1.00	1.00	1.00	1.00	1.00	1.00	1.00	1.00
MLF Adj:	1.00	1.00	1.00	1.00	1.00	1.00	1.00	1.00	1.00	1.00	1.00	1.00
FinalVolume:	69	334	271	560	476	72	85	845	85	276	664	493
Saturation Flow Module:												
Sat/Lane:	1900	1900	1900	1900	1900	1900	1900	1900	1900	1900	1900	1900
Adjustment:	1.00	0.95	1.00	0.97	0.95	1.00	1.00	0.95	1.00	1.00	0.95	1.00
Lanes:	1.00	2.00	1.00	2.00	2.00	1.00	1.00	2.00	1.00	1.00	2.00	1.00
Final Sat.:	1900	3610	1900	3686	3610	1900	1900	3610	1900	1900	3610	1900
Capacity Analysis Module:												
Vol/Sat:	0.04	0.09	0.14	0.15	0.13	0.04	0.04	0.23	0.04	0.15	0.18	0.26
Crit Moves:		****		****				****		****		
Green Time:	12.4	15.3	39.3	25.1	28.0	43.1	15.1	38.7	51.0	24.0	47.6	72.6
Volume/Cap:	0.35	0.73	0.44	0.73	0.57	0.11	0.36	0.73	0.11	0.73	0.46	0.43
Delay/Veh:	51.2	56.1	32.2	47.7	41.5	25.7	48.9	38.3	20.8	51.8	27.0	12.9
User DelAdj:	1.00	1.00	1.00	1.00	1.00	1.00	1.00	1.00	1.00	1.00	1.00	1.00
AdjDel/Veh:	51.2	56.1	32.2	47.7	41.5	25.7	48.9	38.3	20.8	51.8	27.0	12.9
LOS by Move:	D	E	C	D	D	C	D	D	C	D	C	B
HCM2kAvgQ:	2	6	7	11	9	2	3	16	2	10	9	9

Note: Queue reported is the number of cars per lane.

Copyright (c) 2008 Dowling Associates, Inc. Licensed to Hexagon Trans., San Jose

Mowry Ave Residential
Newark, CA
TIA

Level Of Service Computation Report
2000 HCM Operations (Future Volume Alternative)
Proj AM

Intersection #1: Cedar Blvd and Thornton Ave

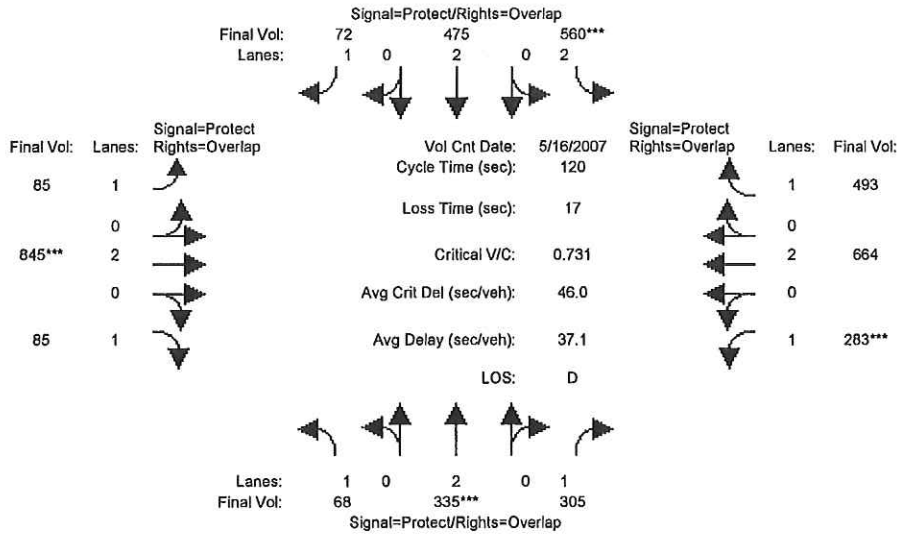

Street Name:	Cedar Boulevard						Thornton Avenue					
Approach:	North Bound			South Bound			East Bound			West Bound		
Movement:	L -	T -	R	L -	T -	R	L -	T -	R	L -	T -	R
Min. Green:	7	10	10	7	10	10	7	10	10	7	10	10
Y+R:	4.0	4.0	4.0	4.0	4.0	4.0	4.0	4.0	4.0	4.0	4.0	4.0
Volume Module: >> Count Date: 16 May 2007 <<												
Base Vol:	68	335	305	560	475	72	85	845	85	283	664	493
Growth Adj:	1.00	1.00	1.00	1.00	1.00	1.00	1.00	1.00	1.00	1.00	1.00	1.00
Initial Bse:	68	335	305	560	475	72	85	845	85	283	664	493
Added Vol:	0	0	0	0	0	0	0	0	0	0	0	0
PasserByVol:	0	0	0	0	0	0	0	0	0	0	0	0
Initial Fut:	68	335	305	560	475	72	85	845	85	283	664	493
User Adj:	1.00	1.00	1.00	1.00	1.00	1.00	1.00	1.00	1.00	1.00	1.00	1.00
PHF Adj:	1.00	1.00	1.00	1.00	1.00	1.00	1.00	1.00	1.00	1.00	1.00	1.00
PHF Volume:	68	335	305	560	475	72	85	845	85	283	664	493
Reduct Vol:	0	0	0	0	0	0	0	0	0	0	0	0
Reduced Vol:	68	335	305	560	475	72	85	845	85	283	664	493
PCE Adj:	1.00	1.00	1.00	1.00	1.00	1.00	1.00	1.00	1.00	1.00	1.00	1.00
MLF Adj:	1.00	1.00	1.00	1.00	1.00	1.00	1.00	1.00	1.00	1.00	1.00	1.00
FinalVolume:	68	335	305	560	475	72	85	845	85	283	664	493
Saturation Flow Module:												
Sat/Lane:	1900	1900	1900	1900	1900	1900	1900	1900	1900	1900	1900	1900
Adjustment:	1.00	0.95	1.00	0.97	0.95	1.00	1.00	0.95	1.00	1.00	0.95	1.00
Lanes:	1.00	2.00	1.00	2.00	2.00	1.00	1.00	2.00	1.00	1.00	2.00	1.00
Final Sat.:	1900	3610	1900	3686	3610	1900	1900	3610	1900	1900	3610	1900
Capacity Analysis Module:												
Vol/Sat:	0.04	0.09	0.16	0.15	0.13	0.04	0.04	0.23	0.04	0.15	0.18	0.26
Crit Moves:		****		****				****		****		
Green Time:	12.3	15.2	39.7	24.9	27.8	43.0	15.1	38.4	50.7	24.4	47.7	72.6
Volume/Cap:	0.35	0.73	0.49	0.73	0.57	0.11	0.35	0.73	0.11	0.73	0.46	0.43
Delay/Veh:	51.2	56.4	32.6	48.0	41.7	25.8	48.9	38.6	21.0	51.7	26.9	12.9
User DelAdj:	1.00	1.00	1.00	1.00	1.00	1.00	1.00	1.00	1.00	1.00	1.00	1.00
AdjDel/Veh:	51.2	56.4	32.6	48.0	41.7	25.8	48.9	38.6	21.0	51.7	26.9	12.9
LOS by Move:	D	E	C	D	D	C	D	D	C	D	C	B
HCM2kAvgQ:	2	6	9	11	9	2	3	16	2	10	9	9

Note: Queue reported is the number of cars per lane.

Copyright (c) 2008 Dowling Associates, Inc. Licensed to Hexagon Trans., San Jose

Mowry Ave Residential
Newark, CA
TIA

Level Of Service Computation Report
2000 HCM Operations (Future Volume Alternative)
Existing AM

Intersection #2: Cedar Boulevard and Central Avenue

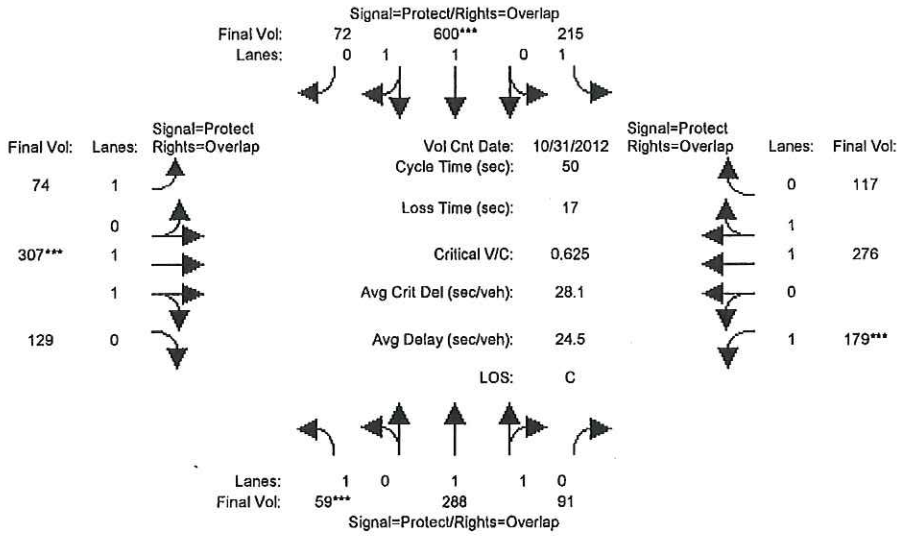

Street Name:	Cedar Boulevard						Central Avenue					
Approach:	North Bound			South Bound			East Bound			West Bound		
Movement:	L -	T -	R	L -	T -	R	L -	T -	R	L -	T -	R
Min. Green:	7	10	10	7	10	10	7	10	10	7	10	10
Y+R:	4.0	4.0	4.0	4.0	4.0	4.0	4.0	4.0	4.0	4.0	4.0	4.0
Volume Module: >> Count Date: 31 Oct 2012 <<												
Base Vol:	59	288	91	215	600	72	74	307	129	179	276	117
Growth Adj:	1.00	1.00	1.00	1.00	1.00	1.00	1.00	1.00	1.00	1.00	1.00	1.00
Initial Bse:	59	288	91	215	600	72	74	307	129	179	276	117
Added Vol:	0	0	0	0	0	0	0	0	0	0	0	0
PasserByVol:	0	0	0	0	0	0	0	0	0	0	0	0
Initial Fut:	59	288	91	215	600	72	74	307	129	179	276	117
User Adj:	1.00	1.00	1.00	1.00	1.00	1.00	1.00	1.00	1.00	1.00	1.00	1.00
PHF Adj:	1.00	1.00	1.00	1.00	1.00	1.00	1.00	1.00	1.00	1.00	1.00	1.00
PHF Volume:	59	288	91	215	600	72	74	307	129	179	276	117
Reduct Vol:	0	0	0	0	0	0	0	0	0	0	0	0
Reduced Vol:	59	288	91	215	600	72	74	307	129	179	276	117
PCE Adj:	1.00	1.00	1.00	1.00	1.00	1.00	1.00	1.00	1.00	1.00	1.00	1.00
MLF Adj:	1.00	1.00	1.00	1.00	1.00	1.00	1.00	1.00	1.00	1.00	1.00	1.00
FinalVolume:	59	288	91	215	600	72	74	307	129	179	276	117
Saturation Flow Module:												
Sat/Lane:	1900	1900	1900	1900	1900	1900	1900	1900	1900	1900	1900	1900
Adjustment:	1.00	1.00	1.00	1.00	1.00	1.00	1.00	1.00	1.00	1.00	1.00	1.00
Lanes:	1.00	1.52	0.48	1.00	1.79	0.21	1.00	1.41	0.59	1.00	1.40	0.60
Final Sat.:	1900	2888	912	1900	3393	407	1900	2676	1124	1900	2669	1131
Capacity Analysis Module:												
Vol/Sat:	0.03	0.10	0.10	0.11	0.18	0.18	0.04	0.11	0.11	0.09	0.10	0.10
Crit Moves:	****				****			****		****		
Green Time:	6.9	9.8	16.7	6.9	9.8	16.7	6.9	9.8	16.7	6.9	9.8	16.7
Volume/Cap:	0.23	0.51	0.30	0.82	0.90	0.53	0.28	0.59	0.34	0.69	0.53	0.31
Delay/Veh:	20.0	18.9	12.7	40.2	34.2	14.2	20.4	19.8	13.0	28.4	19.1	12.8
User DelAdj:	1.00	1.00	1.00	1.00	1.00	1.00	1.00	1.00	1.00	1.00	1.00	1.00
AdjDel/Veh:	20.0	18.9	12.7	40.2	34.2	14.2	20.4	19.8	13.0	28.4	19.1	12.8
LOS by Move:	C	B	B	D	C	B	C	B	B	C	B	B
HCM2kAvgQ:	1	3	2	4	6	4	1	4	3	4	4	3

Note: Queue reported is the number of cars per lane.

Copyright (c) 2008 Dowling Associates, Inc. Licensed to Hexagon Trans., San Jose

Mowry Ave Residential
Newark, CA
TIA

Level Of Service Computation Report
2000 HCM Operations (Future Volume Alternative)
Bkgrd AM

Intersection #2: Cedar Boulevard and Central Avenue

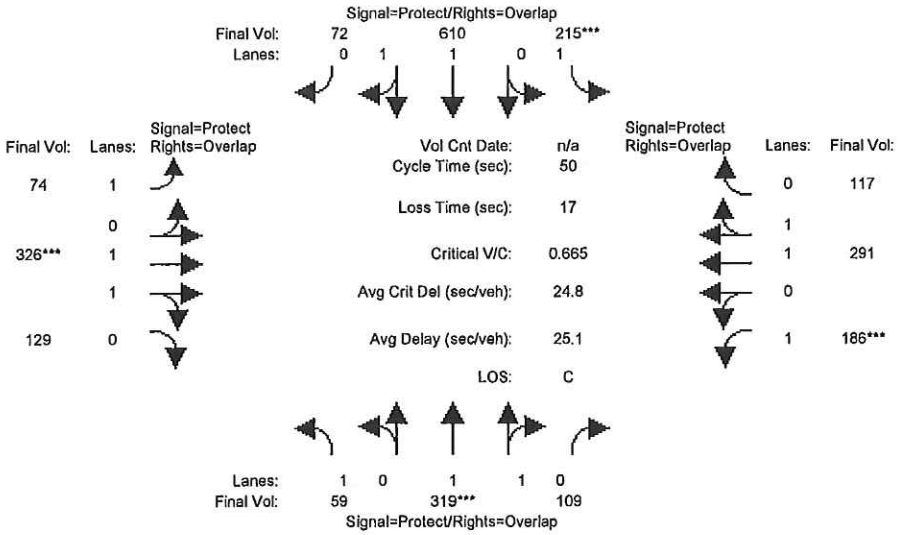

Street Name:	Cedar Boulevard						Central Avenue					
Approach:	North Bound			South Bound			East Bound			West Bound		
Movement:	L -	T -	R	L -	T -	R	L -	T -	R	L -	T -	R
Min. Green:	7	10	10	7	10	10	7	10	10	7	10	10
Y+R:	4.0	4.0	4.0	4.0	4.0	4.0	4.0	4.0	4.0	4.0	4.0	4.0
Volume Module:												
Base Vol:	59	319	109	215	610	72	74	326	129	186	291	117
Growth Adj:	1.00	1.00	1.00	1.00	1.00	1.00	1.00	1.00	1.00	1.00	1.00	1.00
Initial Bse:	59	319	109	215	610	72	74	326	129	186	291	117
Added Vol:	0	0	0	0	0	0	0	0	0	0	0	0
PasserByVol:	0	0	0	0	0	0	0	0	0	0	0	0
Initial Fut:	59	319	109	215	610	72	74	326	129	186	291	117
User Adj:	1.00	1.00	1.00	1.00	1.00	1.00	1.00	1.00	1.00	1.00	1.00	1.00
PHF Adj:	1.00	1.00	1.00	1.00	1.00	1.00	1.00	1.00	1.00	1.00	1.00	1.00
PHF Volume:	59	319	109	215	610	72	74	326	129	186	291	117
Reduct Vol:	0	0	0	0	0	0	0	0	0	0	0	0
Reduced Vol:	59	319	109	215	610	72	74	326	129	186	291	117
PCE Adj:	1.00	1.00	1.00	1.00	1.00	1.00	1.00	1.00	1.00	1.00	1.00	1.00
MLF Adj:	1.00	1.00	1.00	1.00	1.00	1.00	1.00	1.00	1.00	1.00	1.00	1.00
FinalVolume:	59	319	109	215	610	72	74	326	129	186	291	117
Saturation Flow Module:												
Sat/Lane:	1900	1900	1900	1900	1900	1900	1900	1900	1900	1900	1900	1900
Adjustment:	1.00	1.00	1.00	1.00	1.00	1.00	1.00	1.00	1.00	1.00	1.00	1.00
Lanes:	1.00	1.49	0.51	1.00	1.79	0.21	1.00	1.43	0.57	1.00	1.43	0.57
Final Sat.:	1900	2832	968	1900	3399	401	1900	2723	1077	1900	2710	1090
Capacity Analysis Module:												
Vol/Sat:	0.03	0.11	0.11	0.11	0.18	0.18	0.04	0.12	0.12	0.10	0.11	0.11
Crit Moves:		****		****				****		****		
Green Time:	6.9	9.8	16.7	6.9	9.8	16.7	6.9	9.8	16.7	6.9	9.8	16.7
Volume/Cap:	0.23	0.57	0.34	0.82	0.92	0.54	0.28	0.61	0.36	0.71	0.55	0.32
Delay/Veh:	20.0	19.7	12.9	40.2	36.0	14.3	20.4	20.2	13.1	30.0	19.3	12.8
User DelAdj:	1.00	1.00	1.00	1.00	1.00	1.00	1.00	1.00	1.00	1.00	1.00	1.00
AdjDel/Veh:	20.0	19.7	12.9	40.2	36.0	14.3	20.4	20.2	13.1	30.0	19.3	12.8
LOS by Move:	C	B	B	D	D	B	C	C	B	C	B	B
HCM2kAvgQ:	1	3	2	4	6	4	1	4	3	5	4	3

Note: Queue reported is the number of cars per lane.

Copyright (c) 2008 Dowling Associates, Inc. Licensed to Hexagon Trans., San Jose

Mowry Ave Residential
Newark, CA
TIA

Level Of Service Computation Report
2000 HCM Operations (Future Volume Alternative)
Proj AM

Intersection #2: Cedar Boulevard and Central Avenue

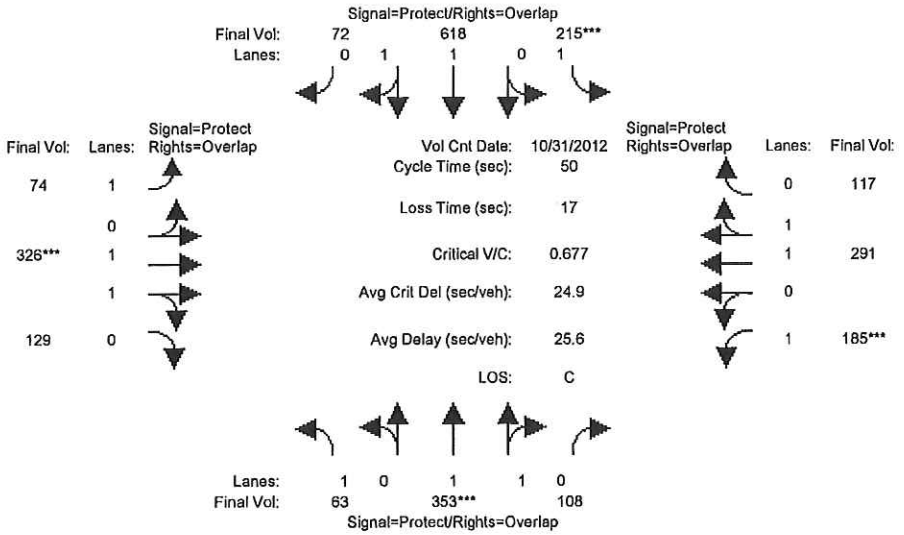

Street Name:	Cedar Boulevard						Central Avenue					
Approach:	North Bound			South Bound			East Bound			West Bound		
Movement:	L -	T -	R	L -	T -	R	L -	T -	R	L -	T -	R
Min. Green:	7	10	10	7	10	10	7	10	10	7	10	10
Y+R:	4.0	4.0	4.0	4.0	4.0	4.0	4.0	4.0	4.0	4.0	4.0	4.0
Volume Module: >> Count Date: 31 Oct 2012 <<												
Base Vol:	63	353	108	215	618	72	74	326	129	185	291	117
Growth Adj:	1.00	1.00	1.00	1.00	1.00	1.00	1.00	1.00	1.00	1.00	1.00	1.00
Initial Bse:	63	353	108	215	618	72	74	326	129	185	291	117
Added Vol:	0	0	0	0	0	0	0	0	0	0	0	0
PasserByVol:	0	0	0	0	0	0	0	0	0	0	0	0
Initial Fut:	63	353	108	215	618	72	74	326	129	185	291	117
User Adj:	1.00	1.00	1.00	1.00	1.00	1.00	1.00	1.00	1.00	1.00	1.00	1.00
PHF Adj:	1.00	1.00	1.00	1.00	1.00	1.00	1.00	1.00	1.00	1.00	1.00	1.00
PHF Volume:	63	353	108	215	618	72	74	326	129	185	291	117
Reduct Vol:	0	0	0	0	0	0	0	0	0	0	0	0
Reduced Vol:	63	353	108	215	618	72	74	326	129	185	291	117
PCE Adj:	1.00	1.00	1.00	1.00	1.00	1.00	1.00	1.00	1.00	1.00	1.00	1.00
MLF Adj:	1.00	1.00	1.00	1.00	1.00	1.00	1.00	1.00	1.00	1.00	1.00	1.00
FinalVolume:	63	353	108	215	618	72	74	326	129	185	291	117
Saturation Flow Module:												
Sat/Lane:	1900	1900	1900	1900	1900	1900	1900	1900	1900	1900	1900	1900
Adjustment:	1.00	1.00	1.00	1.00	1.00	1.00	1.00	1.00	1.00	1.00	1.00	1.00
Lanes:	1.00	1.53	0.47	1.00	1.79	0.21	1.00	1.43	0.57	1.00	1.43	0.57
Final Sat.:	1900	2910	890	1900	3403	397	1900	2723	1077	1900	2710	1090
Capacity Analysis Module:												
Vol/Sat:	0.03	0.12	0.12	0.11	0.18	0.18	0.04	0.12	0.12	0.10	0.11	0.11
Crit Moves:		****		****				****		****		
Green Time:	6.9	9.8	16.7	6.9	9.8	16.7	6.9	9.8	16.7	6.9	9.8	16.7
Volume/Cap:	0.24	0.62	0.36	0.82	0.93	0.54	0.28	0.61	0.36	0.71	0.55	0.32
Delay/Veh:	20.1	20.3	13.1	40.2	37.6	14.3	20.4	20.2	13.1	29.8	19.3	12.8
User DelAdj:	1.00	1.00	1.00	1.00	1.00	1.00	1.00	1.00	1.00	1.00	1.00	1.00
AdjDel/Veh:	20.1	20.3	13.1	40.2	37.6	14.3	20.4	20.2	13.1	29.8	19.3	12.8
LOS by Move:	C	C	B	D	D	B	C	C	B	C	B	B
HCM2kAvgQ:	1	3	3	4	7	4	1	4	3	5	4	3

Note: Queue reported is the number of cars per lane.

Copyright (c) 2008 Dowling Associates, Inc. Licensed to Hexagon Trans., San Jose

Mowry Ave Residential
Newark, CA
TIA

Level Of Service Computation Report
2000 HCM Unsignalized (Future Volume Alternative)
Existing AM

Intersection #3: Cedar Blvd and Cedar Ct

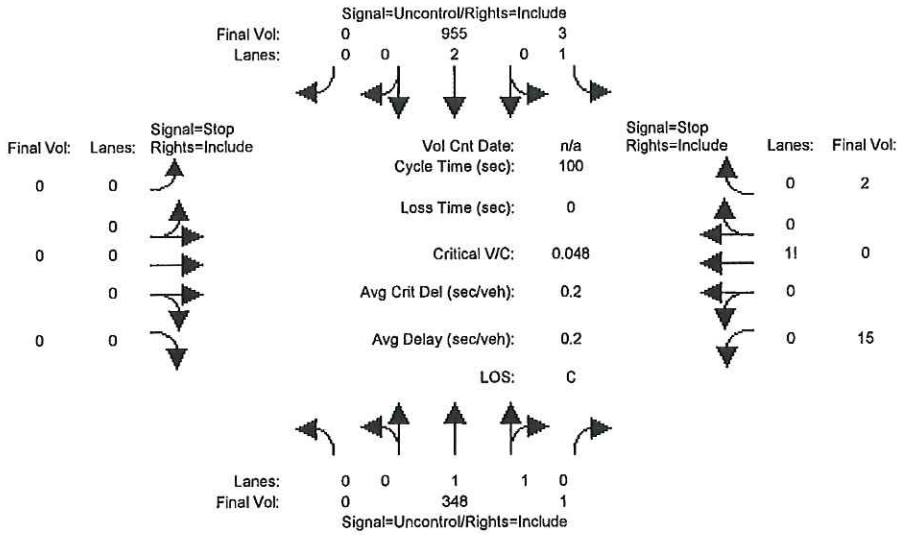


```
Street Name:            Cedar blvd                          Cedar Ct
Approach:       North Bound      South Bound       East Bound       West Bound
Movement:     L  -  T  -  R    L  -  T  -  R    L  -  T  -  R    L  -  T  -  R
------------|---------------||---------------||---------------||---------------|
Volume Module:
Base Vol:       0  348     1     3  955     0     0    0     0    15    0     2
Growth Adj:  1.00 1.00  1.00  1.00 1.00  1.00  1.00 1.00  1.00  1.00 1.00  1.00
Initial Bse:    0  348     1     3  955     0     0    0     0    15    0     2
Added Vol:      0    0     0     0    0     0     0    0     0     0    0     0
PasserByVol:    0    0     0     0    0     0     0    0     0     0    0     0
Initial Fut:    0  348     1     3  955     0     0    0     0    15    0     2
User Adj:    1.00 1.00  1.00  1.00 1.00  1.00  1.00 1.00  1.00  1.00 1.00  1.00
PHF Adj:     1.00 1.00  1.00  1.00 1.00  1.00  1.00 1.00  1.00  1.00 1.00  1.00
PHF Volume:     0  348     1     3  955     0     0    0     0    15    0     2
Reduct Vol:     0    0     0     0    0     0     0    0     0     0    0     0
FinalVolume:    0  348     1     3  955     0     0    0     0    15    0     2
------------|---------------||---------------||---------------||---------------|
Critical Gap Module:
Critical Gp:xxxxx xxxx xxxxx   4.1 xxxx xxxxx xxxxx xxxx xxxxx   6.8  6.5   6.9
FollowUpTim:xxxxx xxxx xxxxx   2.2 xxxx xxxxx xxxxx xxxx xxxxx   3.5  4.0   3.3
------------|---------------||---------------||---------------||---------------|
Capacity Module:
Cnflict Vol: xxxx xxxx xxxxx   349 xxxx xxxxx  xxxx xxxx xxxxx   832 1310   175
Potent Cap.: xxxx xxxx xxxxx  1221 xxxx xxxxx  xxxx xxxx xxxxx   312  161   845
Move Cap.:   xxxx xxxx xxxxx  1221 xxxx xxxxx  xxxx xxxx xxxxx   311  160   845
Volume/Cap:  xxxx xxxx  xxxx  0.00 xxxx  xxxx  xxxx xxxx  xxxx  0.05 0.00  0.00
------------|---------------||---------------||---------------||---------------|
Level Of Service Module:
2Way95thQ:   xxxx xxxx xxxxx   0.0 xxxx xxxxx  xxxx xxxx xxxxx  xxxx xxxx xxxxx
Control Del:xxxxx xxxx xxxxx   8.0 xxxx xxxxx xxxxx xxxx xxxxx xxxxx xxxx xxxxx
LOS by Move:    *    *     *     A    *     *     *    *     *     *    *     *
Movement:     LT - LTR - RT    LT - LTR - RT    LT - LTR - RT    LT - LTR - RT
Shared Cap.: xxxx xxxx xxxxx  xxxx xxxx xxxxx  xxxx xxxx xxxxx  xxxx  336 xxxxx
SharedQueue:xxxxx xxxx xxxxx xxxxx xxxx xxxxx xxxxx xxxx xxxxx xxxxx  0.2 xxxxx
Shrd ConDel:xxxxx xxxx xxxxx xxxxx xxxx xxxxx xxxxx xxxx xxxxx xxxxx 16.3 xxxxx
Shared LOS:     *    *     *     *    *     *     *    *     *     *    C     *
ApproachDel:    xxxxxx            xxxxxx            xxxxxx              16.3
ApproachLOS:         *                 *                 *                 C
Note: Queue reported is the number of cars per lane.
```

Peak Hour Delay Signal Warrant Report

```
*******************************************************************************
Intersection #3 Cedar Blvd and Cedar Ct
*******************************************************************************
Future Volume Alternative: Peak Hour Warrant NOT Met
```


Copyright (c) 2008 Dowling Associates, Inc. Licensed to Hexagon Trans., San Jose

Mowry Ave Residential
Newark, CA
TIA

Level Of Service Computation Report
2000 HCM Unsignalized (Future Volume Alternative)
Bkgrd AM

Intersection #3: Cedar Blvd and Cedar Ct

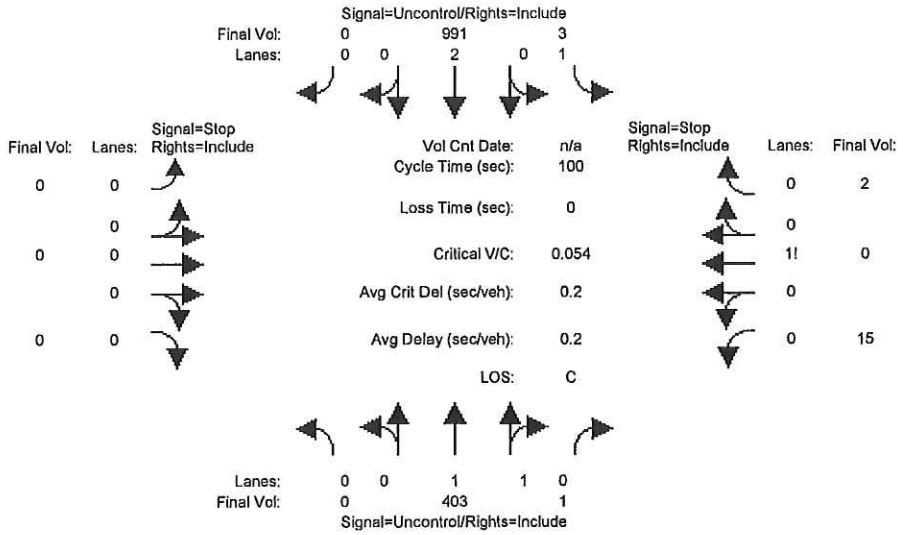


```
Street Name:            Cedar blvd                          Cedar Ct
Approach:       North Bound       South Bound       East Bound       West Bound
Movement:     L  -  T  -  R    L  -  T  -  R    L  -  T  -  R    L  -  T  -  R
------------|---------------||---------------||---------------||---------------|
Volume Module:
Base Vol:       0  403     1     3  991     0     0    0     0    15    0     2
Growth Adj:  1.00 1.00  1.00  1.00 1.00  1.00  1.00 1.00  1.00  1.00 1.00  1.00
Initial Bse:    0  403     1     3  991     0     0    0     0    15    0     2
Added Vol:      0    0     0     0    0     0     0    0     0     0    0     0
PasserByVol:    0    0     0     0    0     0     0    0     0     0    0     0
Initial Fut:    0  403     1     3  991     0     0    0     0    15    0     2
User Adj:    1.00 1.00  1.00  1.00 1.00  1.00  1.00 1.00  1.00  1.00 1.00  1.00
PHF Adj:     1.00 1.00  1.00  1.00 1.00  1.00  1.00 1.00  1.00  1.00 1.00  1.00
PHF Volume:     0  403     1     3  991     0     0    0     0    15    0     2
Reduct Vol:     0    0     0     0    0     0     0    0     0     0    0     0
FinalVolume:    0  403     1     3  991     0     0    0     0    15    0     2
------------|---------------||---------------||---------------||---------------|
Critical Gap Module:
Critical Gp:xxxxx xxxx xxxxx   4.1 xxxx xxxxx xxxxx xxxx xxxxx   6.8  6.5   6.9
FollowUpTim:xxxxx xxxx xxxxx   2.2 xxxx xxxxx xxxxx xxxx xxxxx   3.5  4.0   3.3
------------|---------------||---------------||---------------||---------------|
Capacity Module:
Cnflict Vol: xxxx xxxx xxxxx   404 xxxx xxxxx  xxxx xxxx xxxxx   905 1401   202
Potent Cap.: xxxx xxxx xxxxx  1166 xxxx xxxxx  xxxx xxxx xxxxx   280  142   811
Move Cap.:   xxxx xxxx xxxxx  1166 xxxx xxxxx  xxxx xxxx xxxxx   279  141   811
Volume/Cap:  xxxx xxxx  xxxx  0.00 xxxx  xxxx  xxxx xxxx  xxxx  0.05 0.00  0.00
------------|---------------||---------------||---------------||---------------|
Level Of Service Module:
2Way95thQ:   xxxx xxxx xxxxx   0.0 xxxx xxxxx  xxxx xxxx xxxxx  xxxx xxxx xxxxx
Control Del:xxxxx xxxx xxxxx   8.1 xxxx xxxxx xxxxx xxxx xxxxx xxxxx xxxx xxxxx
LOS by Move:    *    *     *     A    *     *     *    *     *     *    *     *
Movement:     LT - LTR - RT    LT - LTR - RT    LT - LTR - RT    LT - LTR - RT
Shared Cap.: xxxx xxxx xxxxx  xxxx xxxx xxxxx  xxxx xxxx xxxxx  xxxx  303 xxxxx
SharedQueue:xxxxx xxxx xxxxx xxxxx xxxx xxxxx xxxxx xxxx xxxxx xxxxx  0.2 xxxxx
Shrd ConDel:xxxxx xxxx xxxxx xxxxx xxxx xxxxx xxxxx xxxx xxxxx xxxxx 17.6 xxxxx
Shared LOS:     *    *     *     *    *     *     *    *     *     *    C     *
ApproachDel:    xxxxxx            xxxxxx            xxxxxx              17.6
ApproachLOS:         *                 *                 *                 C
Note: Queue reported is the number of cars per lane.
                    Peak Hour Delay Signal Warrant Report
*******************************************************************************
Intersection #3 Cedar Blvd and Cedar Ct
*******************************************************************************
Future Volume Alternative: Peak Hour Warrant NOT Met
```


Copyright (c) 2008 Dowling Associates, Inc. Licensed to Hexagon Trans., San Jose

Mowry Ave Residential
Newark, CA
TIA

Level Of Service Computation Report
2000 HCM Unsignalized (Future Volume Alternative)
Proj AM

Intersection #3: Cedar Blvd and Cedar Ct

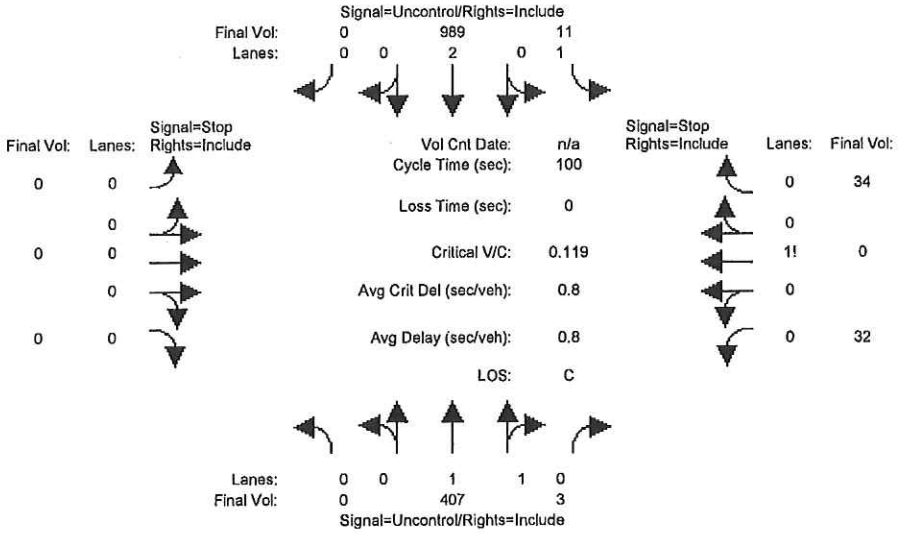

Street Name:	Cedar blvd						Cedar Ct					
Approach:	North Bound			South Bound			East Bound			West Bound		
Movement:	L -	T -	R	L -	T -	R	L -	T -	R	L -	T -	R
Volume Module:												
Base Vol:	0	407	3	11	989	0	0	0	0	32	0	34
Growth Adj:	1.00	1.00	1.00	1.00	1.00	1.00	1.00	1.00	1.00	1.00	1.00	1.00
Initial Bse:	0	407	3	11	989	0	0	0	0	32	0	34
Added Vol:	0	0	0	0	0	0	0	0	0	0	0	0
PasserByVol:	0	0	0	0	0	0	0	0	0	0	0	0
Initial Fut:	0	407	3	11	989	0	0	0	0	32	0	34
User Adj:	1.00	1.00	1.00	1.00	1.00	1.00	1.00	1.00	1.00	1.00	1.00	1.00
PHF Adj:	1.00	1.00	1.00	1.00	1.00	1.00	1.00	1.00	1.00	1.00	1.00	1.00
PHF Volume:	0	407	3	11	989	0	0	0	0	32	0	34
Reduct Vol:	0	0	0	0	0	0	0	0	0	0	0	0
FinalVolume:	0	407	3	11	989	0	0	0	0	32	0	34
Critical Gap Module:												
Critical Gp:	xxxxx	xxxx	xxxxx	4.1	xxxx	xxxxx	xxxxx	xxxx	xxxxx	6.8	6.5	6.9
FollowUpTim:	xxxxx	xxxx	xxxxx	2.2	xxxx	xxxxx	xxxxx	xxxx	xxxxx	3.5	4.0	3.3
Capacity Module:												
Cnflict Vol:	xxxx	xxxx	xxxxx	410	xxxx	xxxxx	xxxx	xxxx	xxxxx	925	1420	205
Potent Cap.:	xxxx	xxxx	xxxxx	1160	xxxx	xxxxx	xxxx	xxxx	xxxxx	272	138	808
Move Cap.:	xxxx	xxxx	xxxxx	1160	xxxx	xxxxx	xxxx	xxxx	xxxxx	270	137	808
Volume/Cap:	xxxx	xxxx	xxxx	0.01	xxxx	xxxx	xxxx	xxxx	xxxx	0.12	0.00	0.04
Level Of Service Module:												
2Way95thQ:	xxxx	xxxx	xxxxx	0.0	xxxx	xxxxx	xxxx	xxxx	xxxxx	xxxx	xxxx	xxxxx
Control Del:	xxxxx	xxxx	xxxxx	8.1	xxxx	xxxxx	xxxxx	xxxx	xxxxx	xxxxx	xxxx	xxxxx
LOS by Move:	*	*	*	A	*	*	*	*	*	*	*	*
Movement:	LT -	LTR -	RT	LT -	LTR -	RT	LT -	LTR -	RT	LT -	LTR -	RT
Shared Cap.:	xxxx	xxxx	xxxxx	xxxx	xxxx	xxxxx	xxxx	xxxx	xxxxx	xxxx	411	xxxxx
SharedQueue:	xxxxx	xxxx	xxxxx	xxxxx	xxxx	xxxxx	xxxxx	xxxx	xxxxx	xxxxx	0.6	xxxxx
Shrd ConDel:	xxxxx	xxxx	xxxxx	xxxxx	xxxx	xxxxx	xxxxx	xxxx	xxxxx	xxxxx	15.4	xxxxx
Shared LOS:	*	*	*	*	*	*	*	*	*	*	C	*
ApproachDel:	xxxxxx			xxxxxx			xxxxxx			15.4		
ApproachLOS:	*			*			*			C		

Note: Queue reported is the number of cars per lane.

Peak Hour Delay Signal Warrant Report

****

Intersection #3 Cedar Blvd and Cedar Ct

****

Future Volume Alternative: Peak Hour Warrant NOT Met

Copyright (c) 2008 Dowling Associates, Inc. Licensed to Hexagon Trans., San Jose

Mowry Ave Residential
Newark, CA
TIA

Level Of Service Computation Report
2000 HCM Operations (Future Volume Alternative)
Existing AM

Intersection #4: Cherry St and Mowry Ave

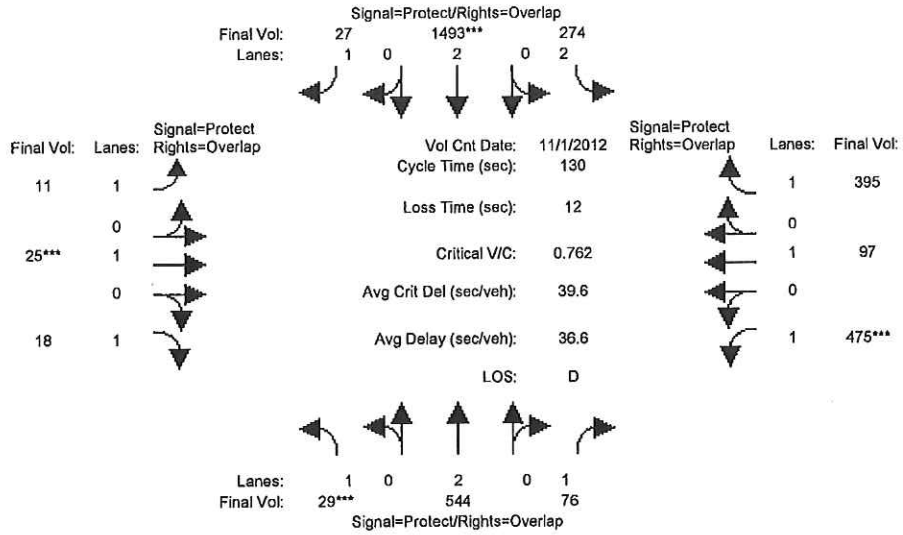

Street Name:	Cherry Street						Mowry Avenue					
Approach:	North Bound			South Bound			East Bound			West Bound		
Movement:	L -	T -	R	L -	T -	R	L -	T -	R	L -	T -	R
Min. Green:	7	10	10	7	10	10	7	10	10	7	10	10
Y+R:	4.0	4.0	4.0	4.0	4.0	4.0	4.0	4.0	4.0	4.0	4.0	4.0
Volume Module: >> Count Date: 1 Nov 2012 <<												
Base Vol:	29	544	76	274	1493	27	11	25	18	475	97	395
Growth Adj:	1.00	1.00	1.00	1.00	1.00	1.00	1.00	1.00	1.00	1.00	1.00	1.00
Initial Bse:	29	544	76	274	1493	27	11	25	18	475	97	395
Added Vol:	0	0	0	0	0	0	0	0	0	0	0	0
PasserByVol:	0	0	0	0	0	0	0	0	0	0	0	0
Initial Fut:	29	544	76	274	1493	27	11	25	18	475	97	395
User Adj:	1.00	1.00	1.00	1.00	1.00	1.00	1.00	1.00	1.00	1.00	1.00	1.00
PHF Adj:	1.00	1.00	1.00	1.00	1.00	1.00	1.00	1.00	1.00	1.00	1.00	1.00
PHF Volume:	29	544	76	274	1493	27	11	25	18	475	97	395
Reduct Vol:	0	0	0	0	0	0	0	0	0	0	0	0
Reduced Vol:	29	544	76	274	1493	27	11	25	18	475	97	395
PCE Adj:	1.00	1.00	1.00	1.00	1.00	1.00	1.00	1.00	1.00	1.00	1.00	1.00
MLF Adj:	1.00	1.00	1.00	1.00	1.00	1.00	1.00	1.00	1.00	1.00	1.00	1.00
FinalVolume:	29	544	76	274	1493	27	11	25	18	475	97	395
Saturation Flow Module:												
Sat/Lane:	1900	1900	1900	1900	1900	1900	1900	1900	1900	1900	1900	1900
Adjustment:	1.00	0.95	1.00	0.97	0.95	1.00	1.00	1.00	1.00	1.00	1.00	1.00
Lanes:	1.00	2.00	1.00	2.00	2.00	1.00	1.00	1.00	1.00	1.00	1.00	1.00
Final Sat.:	1900	3610	1900	3686	3610	1900	1900	1900	1900	1900	1900	1900
Capacity Analysis Module:												
Vol/Sat:	0.02	0.15	0.04	0.07	0.41	0.01	0.01	0.01	0.01	0.25	0.05	0.21
Crit Moves:	****				****			****		****		
Green Time:	7.0	46.8	84.9	23.1	62.9	76.8	13.8	10.0	17.0	38.1	34.2	57.4
Volume/Cap:	0.28	0.42	0.06	0.42	0.85	0.02	0.05	0.17	0.07	0.85	0.19	0.47
Delay/Veh:	60.6	31.5	8.2	47.9	33.8	11.1	52.3	56.7	49.7	55.6	37.4	26.0
User DelAdj:	1.00	1.00	1.00	1.00	1.00	1.00	1.00	1.00	1.00	1.00	1.00	1.00
AdjDel/Veh:	60.6	31.5	8.2	47.9	33.8	11.1	52.3	56.7	49.7	55.6	37.4	26.0
LOS by Move:	E	C	A	D	C	B	D	E	D	E	D	C
HCM2kAvgQ:	1	8	1	5	28	0	0	1	1	19	3	11

Note: Queue reported is the number of cars per lane.

Copyright (c) 2008 Dowling Associates, Inc.
Licensed to Hexagon Trans., San Jose

Mowry Ave Residential
Newark, CA
TIA

Level Of Service Computation Report
2000 HCM Operations (Future Volume Alternative)
Bkgrd AM

Intersection #4: Cherry St and Mowry Ave

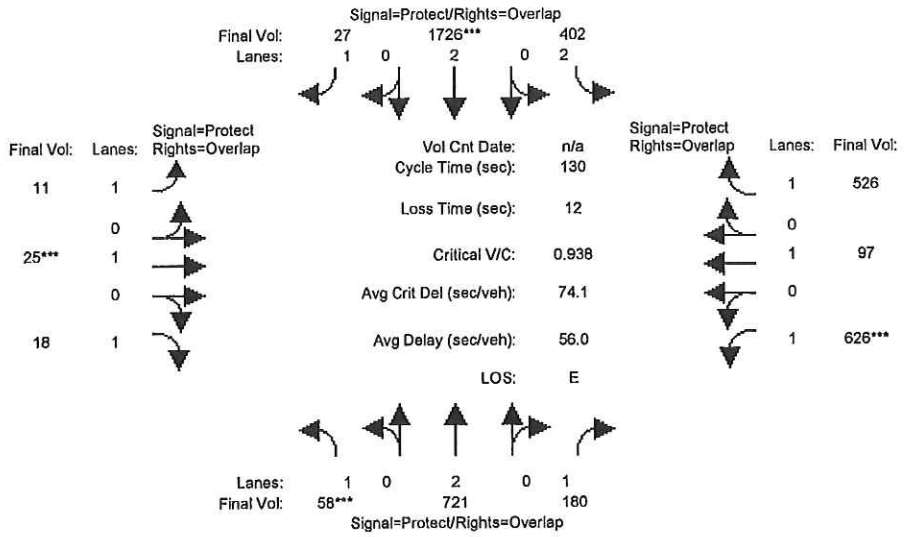

Street Name:	Cherry Street						Mowry Avenue					
Approach:	North Bound			South Bound			East Bound			West Bound		
Movement:	L -	T -	R	L -	T -	R	L -	T -	R	L -	T -	R
Min. Green:	7	10	10	7	10	10	7	10	10	7	10	10
Y+R:	4.0	4.0	4.0	4.0	4.0	4.0	4.0	4.0	4.0	4.0	4.0	4.0
Volume Module:												
Base Vol:	58	721	180	402	1726	27	11	25	18	626	97	526
Growth Adj:	1.00	1.00	1.00	1.00	1.00	1.00	1.00	1.00	1.00	1.00	1.00	1.00
Initial Bse:	58	721	180	402	1726	27	11	25	18	626	97	526
Added Vol:	0	0	0	0	0	0	0	0	0	0	0	0
PasserByVol:	0	0	0	0	0	0	0	0	0	0	0	0
Initial Fut:	58	721	180	402	1726	27	11	25	18	626	97	526
User Adj:	1.00	1.00	1.00	1.00	1.00	1.00	1.00	1.00	1.00	1.00	1.00	1.00
PHF Adj:	1.00	1.00	1.00	1.00	1.00	1.00	1.00	1.00	1.00	1.00	1.00	1.00
PHF Volume:	58	721	180	402	1726	27	11	25	18	626	97	526
Reduct Vol:	0	0	0	0	0	0	0	0	0	0	0	0
Reduced Vol:	58	721	180	402	1726	27	11	25	18	626	97	526
PCE Adj:	1.00	1.00	1.00	1.00	1.00	1.00	1.00	1.00	1.00	1.00	1.00	1.00
MLF Adj:	1.00	1.00	1.00	1.00	1.00	1.00	1.00	1.00	1.00	1.00	1.00	1.00
FinalVolume:	58	721	180	402	1726	27	11	25	18	626	97	526
Saturation Flow Module:												
Sat/Lane:	1900	1900	1900	1900	1900	1900	1900	1900	1900	1900	1900	1900
Adjustment:	1.00	0.95	1.00	0.97	0.95	1.00	1.00	1.00	1.00	1.00	1.00	1.00
Lanes:	1.00	2.00	1.00	2.00	2.00	1.00	1.00	1.00	1.00	1.00	1.00	1.00
Final Sat.:	1900	3610	1900	3686	3610	1900	1900	1900	1900	1900	1900	1900
Capacity Analysis Module:												
Vol/Sat:	0.03	0.20	0.09	0.11	0.48	0.01	0.01	0.01	0.01	0.33	0.05	0.28
Crit Moves:	****				****			****		****		
Green Time:	7.0	43.2	84.4	23.6	59.8	72.2	12.4	10.0	17.0	41.2	38.8	62.4
Volume/Cap:	0.57	0.60	0.15	0.60	1.04	0.03	0.06	0.17	0.07	1.04	0.17	0.58
Delay/Veh:	67.3	37.1	8.9	50.4	68.2	13.0	53.6	56.7	49.7	91.7	33.9	25.3
User DelAdj:	1.00	1.00	1.00	1.00	1.00	1.00	1.00	1.00	1.00	1.00	1.00	1.00
AdjDel/Veh:	67.3	37.1	8.9	50.4	68.2	13.0	53.6	56.7	49.7	91.7	33.9	25.3
LOS by Move:	E	D	A	D	E	B	D	E	D	F	C	C
HCM2kAvgQ:	2	12	3	7	43	0	0	1	1	31	3	15

Note: Queue reported is the number of cars per lane.

Copyright (c) 2008 Dowling Associates, Inc.
Licensed to Hexagon Trans., San Jose